Support: http://www.jcmglobal.com/en/contact/default.aspx **Web-Site:** http://www.jcmglobal.com

iVIZION® Series

Next-Generation Banknote Acceptor Unit

Operation and Maintenance Manual

(Revision 3)

P/N 960-100929R_Rev. 3 {EDP #148849}

Issue #4074-SME-01-03

Issue #4074-SME-01-03

REVISION HISTORY			
Rev №.	**Date**	**Reason for Update**	**Comment**
A	1-06-11	**Initial Version**	
1	3-1-11	**Section 7 Parts List Number Changes incorporated.**	**Engineering dictated changes**
2	7-11-11	**Additional Section 7 Parts List Number Changes incorporated and LD Version information added.**	**Engineering dictated changes**
3	1-25-12	**Added Specifications, installation information and Graphics regarding the iVIZION LD Version Unit.**	**Engineering dictated changes**

International Compliance

- RoHS Directives or or or
- UL & c-UL Marks **File No. E142330, Subscriber 857947001, Vo.2**
- CE Mark
- CB Scheme **NO58326**
- FCC & IC Directives **See Below.**

Contains Transmitter Module
FCC ID: VZQNRWA3
MODEL NO.: NRWA3
IC: 8285A-NRWA3
This device complies with Part 15 of FCC Rules and RSS-Gen of IC Rules. Operation is subject to the following two conditions: (1) this device may not cause interference, and (2) this device must accept any interference, including interference that may cause undesired operation of this device.

FCC WARNING
Changes or modifications not expressly approved by the party responsible for compliance could void the user's authority to operate the equipment.
FCC NOTICE
This equipment has been tested and found to comply with the limits for a Class A digital device, pursuant to part 15 of the FCC Rules. These limits are designed to provide reasonable protection against harmful interference when the equipment is operated in a commercial environment.
This equipment generates, uses and can radiate radio frequency energy and, if not installed and used in accordance with the instructions, may cause harmful interference to radio communications. Operation of this equipment in a residential area is likely to cause harmful interference in which case the user will be required to correct the interference at his own expense.
IC NOTICE
This class A digital apparatus complies with Canadian ICES-003.
Cet appareil numerique de la classe A est conforme a la norme NMB-003 du Canada.

iVIZION® Series
Next-Generation Banknote Acceptor Unit
Table of Contents

Page

TOC

Table of Contents

Table of Contents

Table of Contents

iVIZION® Series
Next-Generation Banknote Acceptor Unit
List of Figures

LOF **Page**

List of Figures

List of Figures

List of Figures

List of Figures

THIS PAGE INTENTIONALLY LEFT BLANK

iVIZION® Series
Next-Generation Banknote Acceptor Unit
List of Tables

Page

LOT

List of Tables

iVIZION® Series

Next-Generation Banknote Acceptor Unit

Section 1

1 GENERAL INFORMATION

Description

This section provides a general overview of the iVIZION® Next-Generation Banknote Acceptor Series pictured in Figure 1-1. This first section is designed to help you navigate through this guide with ease and provides the following information:

- iVIZION® Unit
- Component Names
- Primary Features
- Model Description
- Type Description
- Software Description
- Precautions
- Specifications
- Unit Dimensions
- International Compliance
- Technical Contact Information.

In order to make operation of this device easier and make navigation within this manual simpler, the following illustrations were used within the text:

- **Safety Instructions,** which need to be observed in order to protect the operators and equipment, have been written in bold text and have been given the pictographs: ⚠ ⚠ ⚠
- **Special *Notes,*** which effect the use of the Banknote Acceptor, have been written in *italic* text and have been given the pictograph: ☞
- **Steps,** requiring the operator to perform specific actions are given sequential numbers (1., 2., 3., etc).

iVIZION Units

Figure 1-1 iVIZION Units

Model Number Specifications

Table 1-1 lists the iVIZION® Model Number Descriptions.

Table 1-1 iVIZION Model Number Specifications

Nº	Model: iVIZION - * * * - SS Nº (1)(2)(3) (4)
(1)	Validation Head **1: Standard** **2 - 9: Reserved**
(2)	CPU Board (Memory) **0: Standard** **1 - 9: Reserved**
(3)	Transport Unit Type **0: Standard** **1 - 9: Reserved**
(4)	Stacker Type **SS: Security Stacker Down** **LD: Less Down (No Stacker)**

Type Descriptions

Table 1-2 lists the iVIZION® Type Number Descriptions.

Table 1-2 iVIZION Type Number Specifications

Nº	Type: * * * - 00 - * * * * * Nº (a)(b)(c) (d) (e)(f)(g)(h)(i)
(a)	Box Capacity* **5: 500 notes (New Banknote)** **9: 900 notes (New Banknote)** **0: No Cash Box**
(b)	Box Type **0: Standard**
(c)	Box Handle **0: Standard**
(d)	Transport Unit Type **00: Standard**
(e)	Bezel (Option) **0: Without Bezel** **1: With LED Bezel (UBA Standard 85)**
(f)	ICB (RFID Type) **0: None** **1: ICB-Compliant (Standard) (for SS Version Only)**
(g)	Optional Board (Memory) **0: Standard Memory (64M Bit)** **1: Memory Extension Board (128M bit)** **2: Memory Extension Board (192M bit)**
(h)	Input/Output Signal Selection **P: Photo-Coupler Isolation (Standard)** **R: RS232C**
(d)	External Harness Type **0: No Harness** **1: Standard Harness (One side cut)** **2: Harness (with USB I/F Cable) (One side cut)** **3: Harness 2 (with Connector and USB I/F Cable)**

*. The numbers of stacked Notes depends on the Banknote's condition.

Software Descriptions

Table 1-3 lists the iVIZION® Software Number Descriptions.

Table 1-3 iVIZION Software Number Specifications

Nº	Software: iVIZION-100-SS * * * - * * * - V *.* * Nº (A) (B) (C) (D)
(A)	Software Model Name
(B)	Denomination (Country Code)
(C)	Interface Protocol Name
(D)	Software Version

Precautions

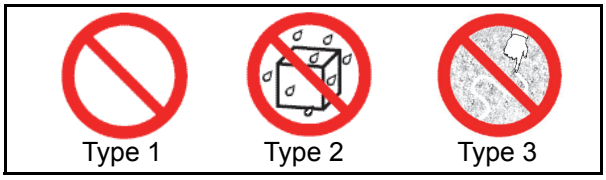

Figure 1-2 Precautionary Symbols

The Figure 1-2 symbols are defined as follows:

1. (**Type 1**) Do not insert a torn, folded, or wet Banknote into the Unit, as this action may cause a Banknote jam inside the unit.
2. (**Type 2**) Do not expose the Unit to water. The unit contains several precision electronic devices which can be damaged if water or liquid of any kind is sprayed or spilled into the Unit.
3. (**Type 3**) Do not install the Unit into a dusty environment. Dust may affect and degrade the Sensor's performance.

User Cautions

Careful measures are taken in this product to ensure its quality, however, the following Cautions should be read and understood by all users in order to confirm safe operation.

Installation Cautions

1. Do not allow the Unit to endure or operate at a high temperature, in high humidity and/or in a dusty environment.
2. Do not install the Unit into an area where excessive vibration or shock are present.
3. This equipment is not fully warranted for outdoor use. Be sure that the Host Machine contains enough protection to avoid wet or dusty conditions when installing it in both open-air and indoor spaces.
4. Avoid exposing the Unit to direct Sunlight and/or Incandescent Lamp illumination having a Gradient Angle of 15 Degree or more, and illumination index of 3000 Lux or less.
5. Insure that the Host Machine is designed for daily operational access such as maintenance and/or clearing a Banknote jam.

Mounting, Dismounting & Transportation

1. Be sure to turn the Power OFF before mounting or removing the Unit from its permanent location. Plugging or unplugging Connector Plugs from their receptacles while the Power is ON may cause damage to the Unit.
2. When reassembling a disassembled Unit Part, ensure that the each part is properly replaced in its correct original location.
3. Be sure to carry the Unit by both hands when transporting it. Holding the Unit by one hand may cause personal injury if the Unit accidently becomes disassembled and drops away.
4. Be careful not to use excessive outside pressure on the Unit, or subject it to excessive vibration during transportation.

Preventive Maintenance

1. Be sure to turn the Power OFF before beginning a maintenance procedure. The equipment can produce abnormal operating signals while in maintenance mode that may cause personal injury.
2. If the Validator Section is dirty due to dust, foreign objects or other such debris adhering to it, Banknote acceptance rates will degrade. Clean the Unit once a month to keep its performance stable.
3. Use a soft, lint-free cloth, cotton swab or a compressed air spray to clean dust and debris from the Banknote path.

Caution: DO NOT use any alcohol, solvents, scouring agents or citrus based cleaners that can damage the plastic surfaces of the device when cleaning it.

4. Do not disassemble the Unit incorrectly or redesign it in any way. Unauthorized use by inadequately trained personnel, or use outside the original manufacturer's intent for operation voids the warranty.
5. When the Unit is exposed to liquid such as water, wipe and thermally dehydrate dry the wet areas immediately. Remaining liquid fluids may affect and degrade the Sensors and the Validation Section's performance.

Caution: Make Interface Harness connections to the Host Machine shorter than 9.84 Feet (3 Meters) in length. Cut off all unused portions of the Interface Harness wiring to avoid static electrical effects or short circuit possibilities that could cause damage to the Unit.

WARNING: This Unit is designed for use with a Current limiting Power Source! Design the Host Cabinet space to meet all local related safety standards.

Banknote Fitness Requirements

The following Banknote types may not validate correctly, or can cause a Banknote jam and/or damage to the Unit's Transport path. Banknotes exhibiting the conditions listed below and illustrated in Figure 1-3 should be avoided:

- Torn
- Having excessive folds
- Dirty
- Wet
- Having excessive wrinkles
- Adhering foreign objects and/or oil.

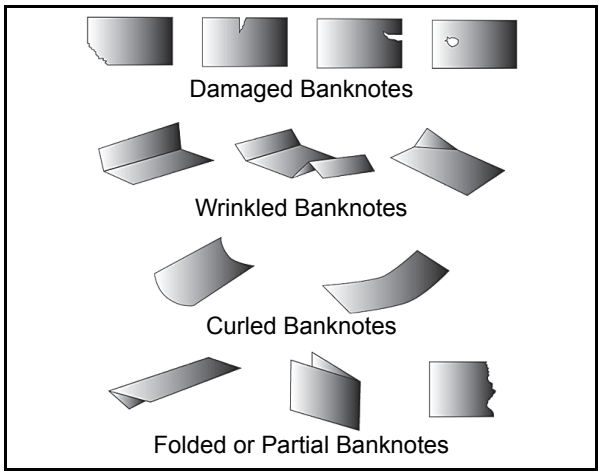

Figure 1-3 Unacceptable Banknotes

Reference Paper Use Precautions

When calibration using the KS-072 Reference Paper is complete, proceed as follows:

- Ensure that the Reference Paper Carrier is kept in an upright position following use (See Figure 1-4 a) or, replace it into its protective Shipping Carton when calibration is complete (See Figure 1-4 b).

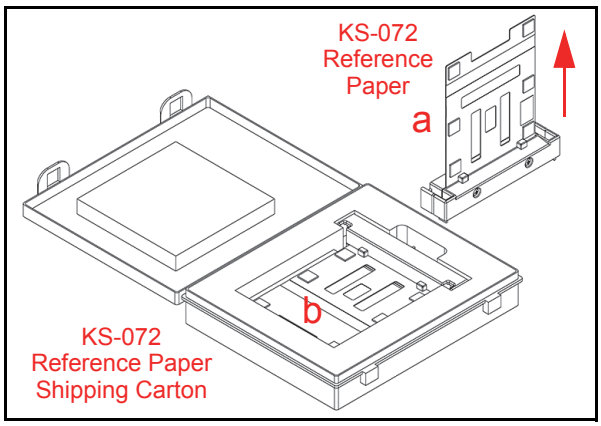

Figure 1-4 KS-072 Reference Paper Handling Precautions

- Do not lay the Reference Paper Carrier down on any irregular surface, otherwise the Reference Paper may become wrinkled making it useless for future calibration use.
- ALWAYS return the KS-072 Reference Paper into it protective Shipping Carton following each use.

Primary Features

The iVIZION® Series of Banknote Acceptor contains the following primary features:

- Easily swappable single Validation Head for inventory and maintenance efficiently.
- CIS technology allowing 100% scanning of document details and fine line imagery.
- RFID Intelligent Cash Box with lockable Frame Unit, and a single handle for one-hand action removal without having to use a Button or Lever to release the Cash Box.

Component Names

Figure 1-5 illustrates the iVIZION® Component Names and Locations.

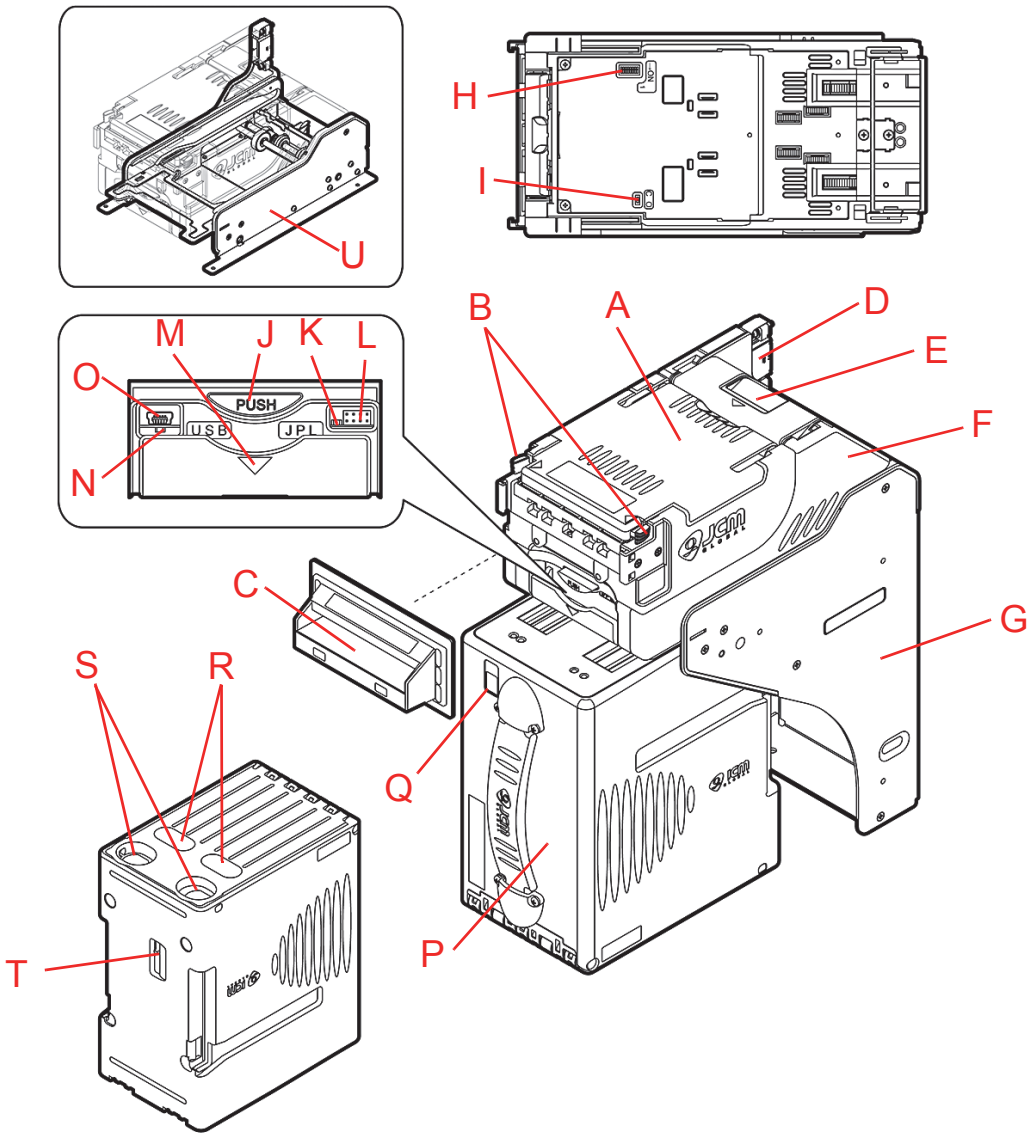

A. Acceptor Unit
B. Front Upper Guide Access Lever (Acceptor Unit)
C. Bezel (Option)
D. Interface Connector
E. Rear Upper Guide Access Lever (Transport Unit)
F. Transport Unit
G. Frame Housing (SS Specification)
H. DIP Switch Block (Denomination INHIBIT)
I. DIP Switch Block (JCM Custom Private Line)
J. Acceptor Unit Release Pushbutton
K. Status LED (Four (4) Colors: Red/Yellow/Green & Blue)
L. Front Panel Bezel JPL Connector
M. Transport Unit Release Lever
N. Power ON LED (Green)
O. USB (Mini-B) Software Download/Calibration & Maintenance Connector
P. Cash Box
Q. Stack Volume Indicator Window
R. Cash Box Window - confirms the last stacked Banknote Denomination Value
S. Lock Installation Hole (user provided)
T. Pusher Lever - manually moves the Pusher Plate down (Activate lever to confirm the denomination value through Cash Box Windows "R")
U. Frame Housing (LD Version).

Figure 1-5 iVIZION Component Names

Specification (iVIZION SS Version)

TECHNICAL SPECIFICATIONS

Table 1-4 iVIZION SS Version Technical Specification

Acceptance Rate*:	98% or greater Note: The following Banknote types are excluded: a) Banknotes with unclear graphics b) Double (dual) notes c) Worn, dirty, wet, stained, torn or excessively wrinkled Banknotes d) Banknotes having folded corners or edges e) Banknotes having the wrong cut dimensions or a printing displacement f) Returned Banknotes because of incorrect or failed insertion.
Banknote Types Accepted:	Long edge: 110-170 mm (4.33-6.69 in.) Short edge: 60-85 mm (2.36-3.35 in.).
Barcode Coupon†:	Standard Specification a) Read Code interleaved: 2 of 5 b) Narrow Bar: 0.5mm-0.6mm (0.019-0.023 in.) c) Wide Bar: Narrow Bar = 3:1 d) Characters: 18 Characters e) Print Position: Middle (by dividing a Coupon equally on the left, right, top and bottom of the Coupon's exact center) f) Print Width: Wider than 10mm (0.39 in.).
Insertion Direction:	Refer to the specific Country's Software Information Sheet.
Processing Speed:	Approximately 2 seconds from Banknote insertion to Vend signal output. Approximately 3 seconds from Banknote insertion to completion of the stacking operation.
Validation Method:	Optical
Diagnostic Indicators:	Power LED, Status LED, Bezel LED (Optional)
Escrow:	1 Note
Cash Box Type‡:	Secure Cash Box Intelligent Cash Box (available with RFID Specification)
Cash Box Capacity**:	Standard: 500 Banknotes Large: 900 Banknotes.
Fraud Detection:	Equipped
Interface††:	USB Interface: USB Specification Rev.2.0 Serial Interface: Photo-Coupler Isolation Serial Interface: RS232C Communication Protocol.

*. Refer to the specific Country's "Software Information Sheet" for each Country's particular Banknote acceptance rate.
†. Refer to the specific Country's "Bar Code Coupon Specification" for more details.
‡. User supplied installed Locks (including the attached Plate, Lock and Key).
**.The number of Notes stacked depends on the Banknote's condition.
††.The Interface Harness connecting to the Host should be less than 3m.

ENVIRONMENTAL SPECIFICATIONS

Table 1-5 iVIZION SS Version Environmental Specification

Operating Temperature:	5º C to +50º C (41º F to 122º F)
Storage Temperature:	-20º C to +70º C (-4º F to 158º F)
Relative Operating Humidity:	15% to 85% RH (non-condensed)
Relative Storage Humidity:	15% to 85% RH (non-condensed)
Installation:	Indoors Only

Hydrothermal Condition Table

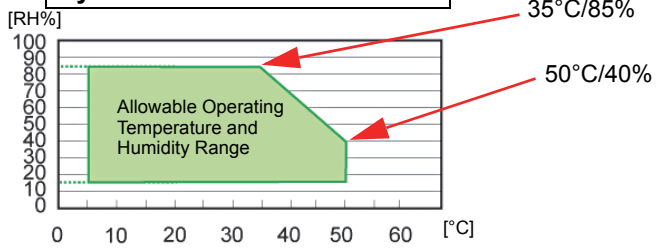

ELECTRICAL SPECIFICATIONS

Table 1-6 iVIZION SS Version Electrical Specifications

Supply Voltage:	12V DC (-5%) to 24V DC (+10%) [NOTE: Use a Current Source Limiting Power Supply]
Current Consumption:	Standby: 24V DC = 0.2A, 12V DC = 0.2A Operation: 24V DC = 1.3A, 12V DC = 2.3A Maximum: 24V DC = 3.2A, 12V DC = 3.0A

STRUCTURAL SPECIFICATIONS

Table 1-7 iVIZION SS Version Structural Specifications

Weight Empty:	Approximately 4.1kg (9.04 lbs)
Mounting:	Horizontal (Maximum gradient limitation within 50 degrees; See Figure 1-8 on page 1-10)
Outside Dimensions:	Refer to “iVIZION Banknote Acceptor SS Version Unit Outside Dimensions” on page 1-9 of this document.

Specification (iVIZION LD Version)

TECHNICAL SPECIFICATIONS

Table 1-8 iVIZION LD Version Technical Specification

Acceptance Rate*:	98% or greater Note: The following Banknote types are excluded: a) Banknotes with unclear graphics b) Double (dual) notes c) Worn, dirty, wet, stained, torn or excessively wrinkled Banknotes d) Banknotes having folded corners or edges e) Banknotes having the wrong cut dimensions or a printing displacement f) Returned Banknotes because of incorrect or failed insertion.
Banknote Types Accepted:	Long edge: 110-170 mm (4.33-6.69 in.) Short edge: 60-85 mm (2.36-3.35 in.).
Barcode Coupon†:	Standard Specification a) Read Code interleaved: 2 of 5 b) Narrow Bar: 0.5mm-0.6mm (0.019-0.023 in.) c) Wide Bar: Narrow Bar = 3:1 d) Characters: 18 Characters e) Print Position: Middle (by dividing a Coupon equally on the left, right, top and bottom of the Coupon's exact center) f) Print Width: Wider than 10mm (0.39 in.).
Insertion Direction:	Refer to the specific Country's Software Information Sheet.
Processing Speed:	Approximately 2 seconds from Banknote insertion to Vend signal output.
Validation Method:	Optical
Diagnostic Indicators:	Power LED, Status LED, Bezel LED (Optional)
Escrow:	1 Note
Fraud Detection:	Equipped
Interface‡:	USB Interface: USB Specification Rev.2.0 Serial Interface: Photo-Coupler Isolation Serial Interface: RS232C Communication Protocol.

*. Refer to the specific Country's "Software Information Sheet" for each Country's particular Banknote acceptance rate.

†. Refer to the specific Country's "Bar Code Coupon Specification" for more details.

‡. The Interface Harness connecting to the Host should be less than 3m.

ENVIRONMENTAL SPECIFICATIONS

Table 1-9 iVIZION LD Version Environmental Specification

Operating Temperature:	5º C to +50º C (41º F to 122º F)
Storage Temperature:	-20º C to +70º C (-4º F to 158º F)
Relative Operating Humidity:	15% to 85% RH (non-condensed)
Relative Storage Humidity:	15% to 85% RH (non-condensed)
Installation:	Indoors Only

Hydrothermal Condition Table

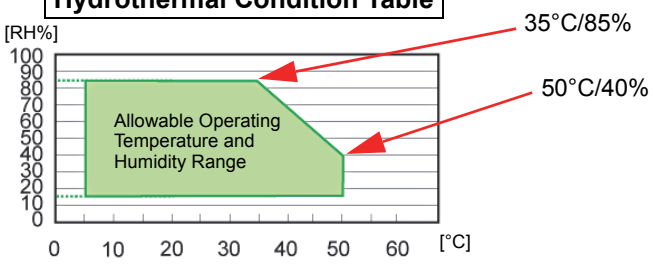

ELECTRICAL SPECIFICATIONS

Table 1-10 iVIZION LD Version Electrical Specifications

Supply Voltage:	12V DC (-5%) to 24V DC (+10%) [NOTE: Use a Current Source Limiting Power Supply]
Current Consumption:	Standby: 24V DC = 0.2A, 12V DC = 0.2A Operation: 24V DC = 1.3A, 12V DC = 2.3A Maximum: 24V DC = 3.2A, 12V DC = 3.0A

STRUCTURAL SPECIFICATIONS

Table 1-11 iVIZION LD Version Structural Specifications

Weight Empty:	Approximately 2.3kg (5.07 lbs)
Mounting:	Horizontal (Maximum gradient limitation within 50 degrees; See Figure 1-8 on page 1-10)
Outside Dimensions:	Refer to “iVIZION LD Version Unit Outside Dimensions” on page 1-11 of this document.

iVIZION Entire Unit Outside Dimensions

Figure 1-6 illustrates the iVIZION SS Version entire Unit outside dimensions.

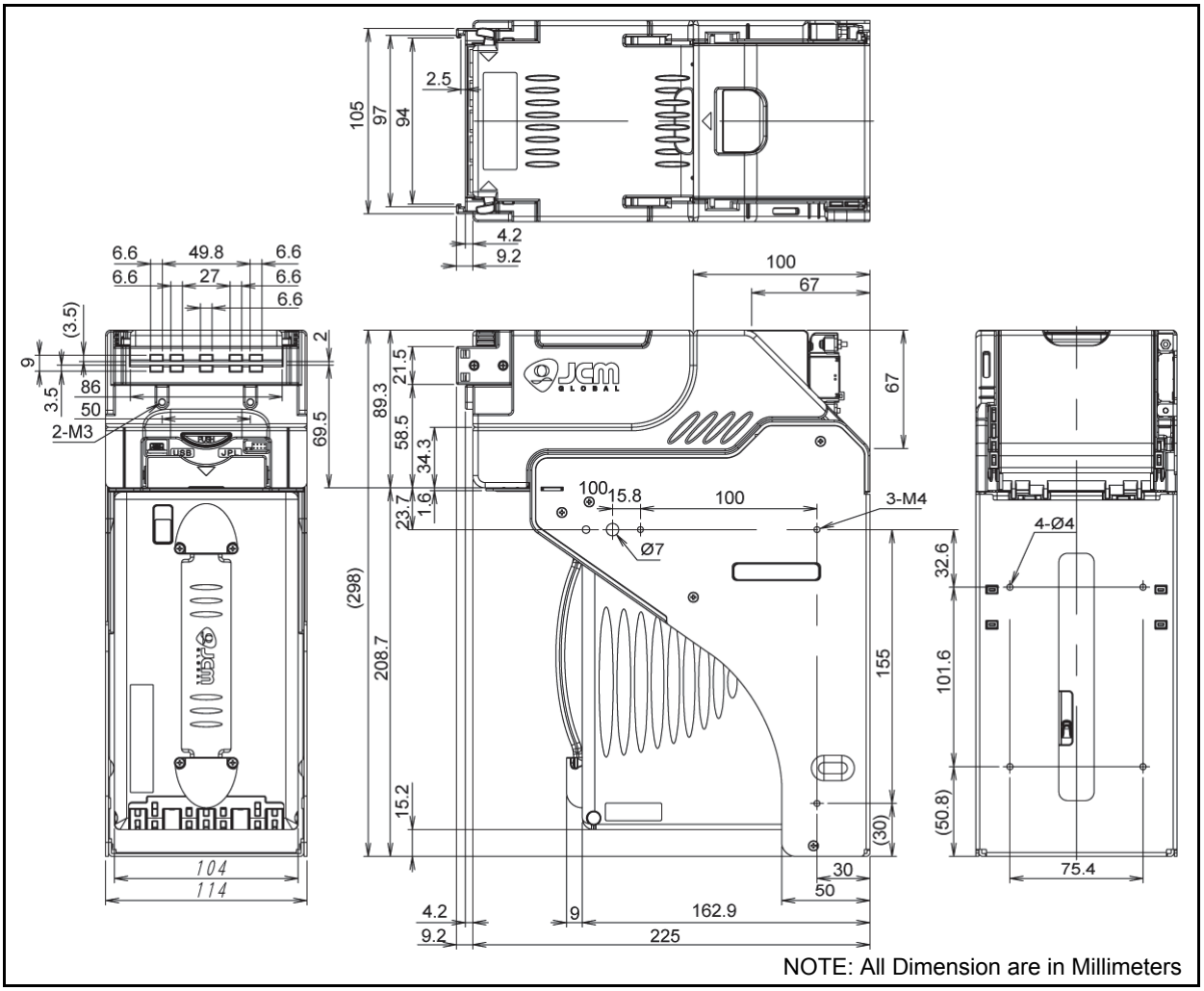

Figure 1-6 iVIZION Banknote Acceptor SS Version Unit Outside Dimensions

iVIZION SS Version Installation/Maintenance Space Requirements

Figure 1-7 illustrates the iVIZION® SS Version installation and maintenance and space requirements.

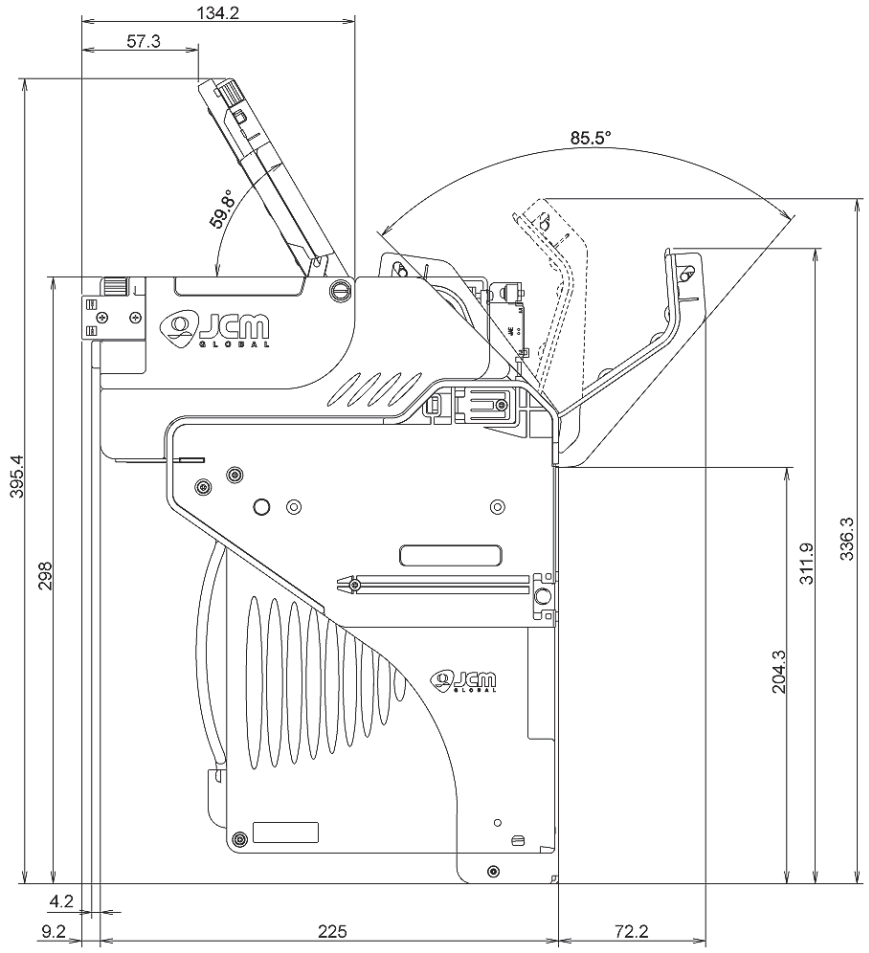

NOTE: All Dimension are in Millimeters

Figure 1-7 iVIZION SS Version Unit Installation and Maintenance Space Requirements Diagram

NOTE: If a maintenance space clearance area is unavailable, the iVIZION® SS Version Unit will need to be dismounted when maintenance procedures need to be performed.

Caution: When installing the iVIZION SS Version Unit into a Host Machine, do not mount it tilted downward more than 50 degrees from a Horizontal position (See Figure 1-8).

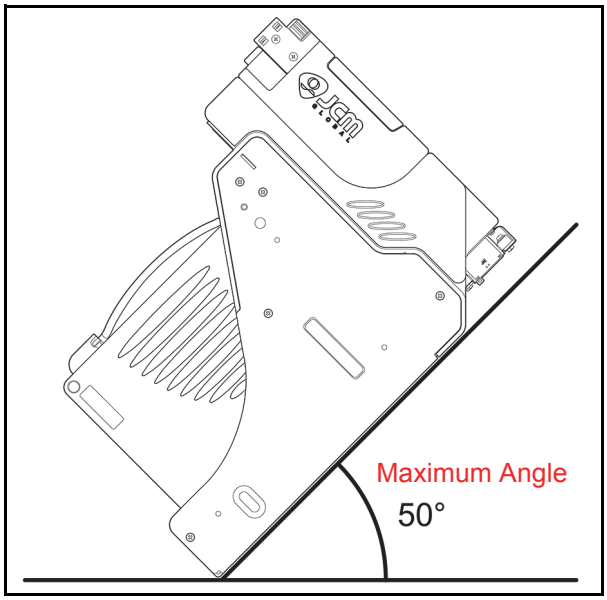

Figure 1-8 Maximum Gradient Angle = 50 Degrees

iVIZION LD Specification Unit Dimensions

Figure 1-9 illustrates the iVIZION® LD Unit Outside Dimensions.

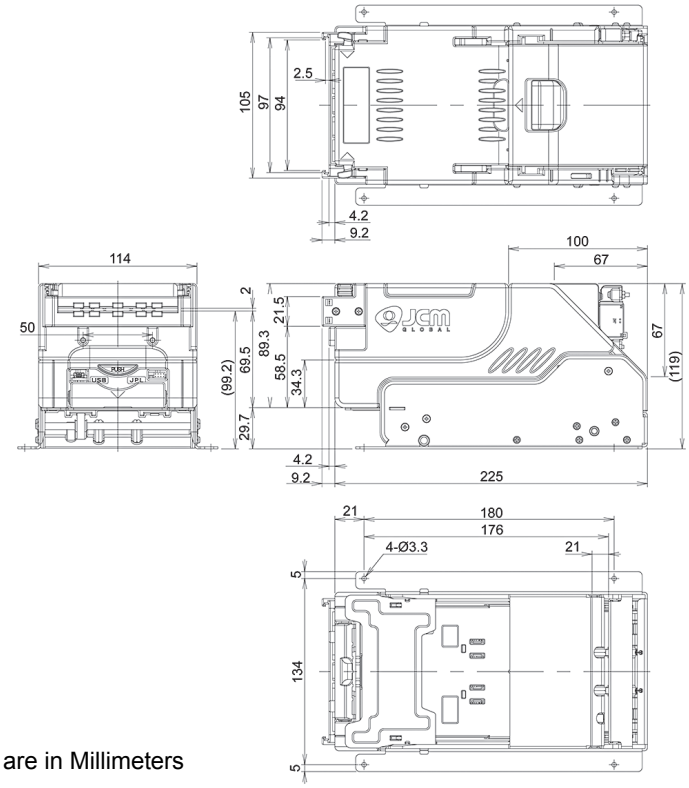

NOTE: All Dimension are in Millimeters

Figure 1-9 iVIZION LD Version Unit Outside Dimensions

Figure 1-10 illustrates the iVIZION® LD Unit with Bezel Outside Dimensions.

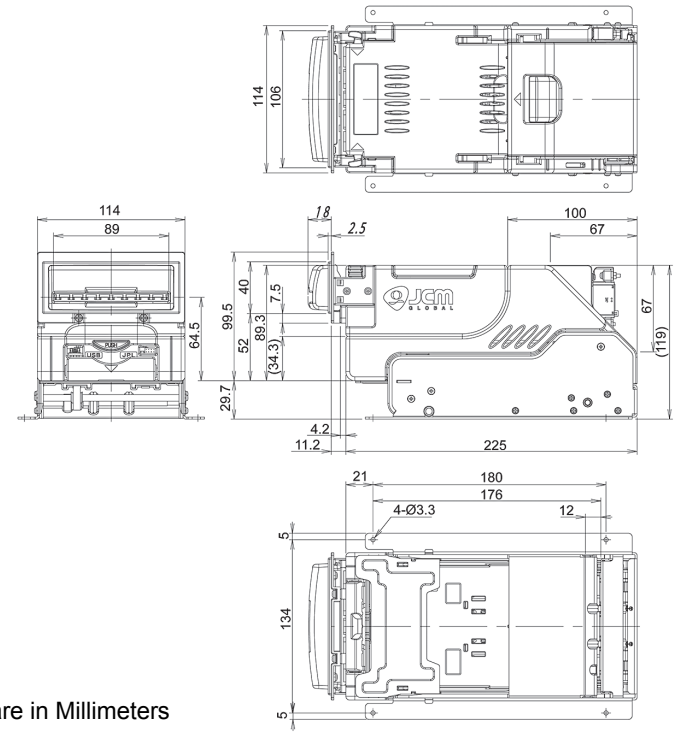

NOTE: All Dimension are in Millimeters

Figure 1-10 iVIZION LD Version Unit with Bezel Outside Dimensions

Various Cash Box Unit Dimensions

STANDARD CASH BOX OUTSIDE DIMENSIONS

Figure 1-11 illustrates the iVIZION® Standard Cash Box Outside Dimensions.

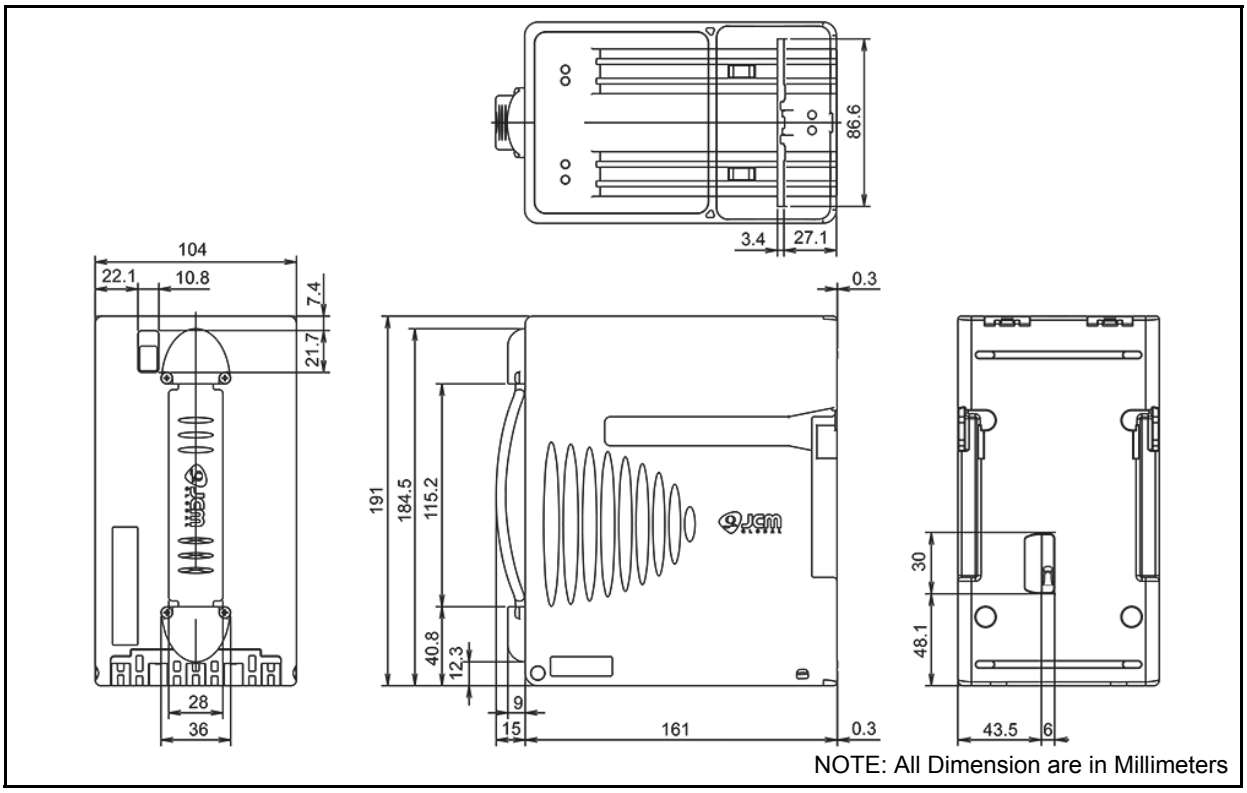

Figure 1-11 iVIZION Standard Cash Box Outside Dimensions

LARGE CASH BOX OUTSIDE DIMENSIONS

Figure 1-12 illustrates the iVIZION® Large Cash Box Outside Dimensions.

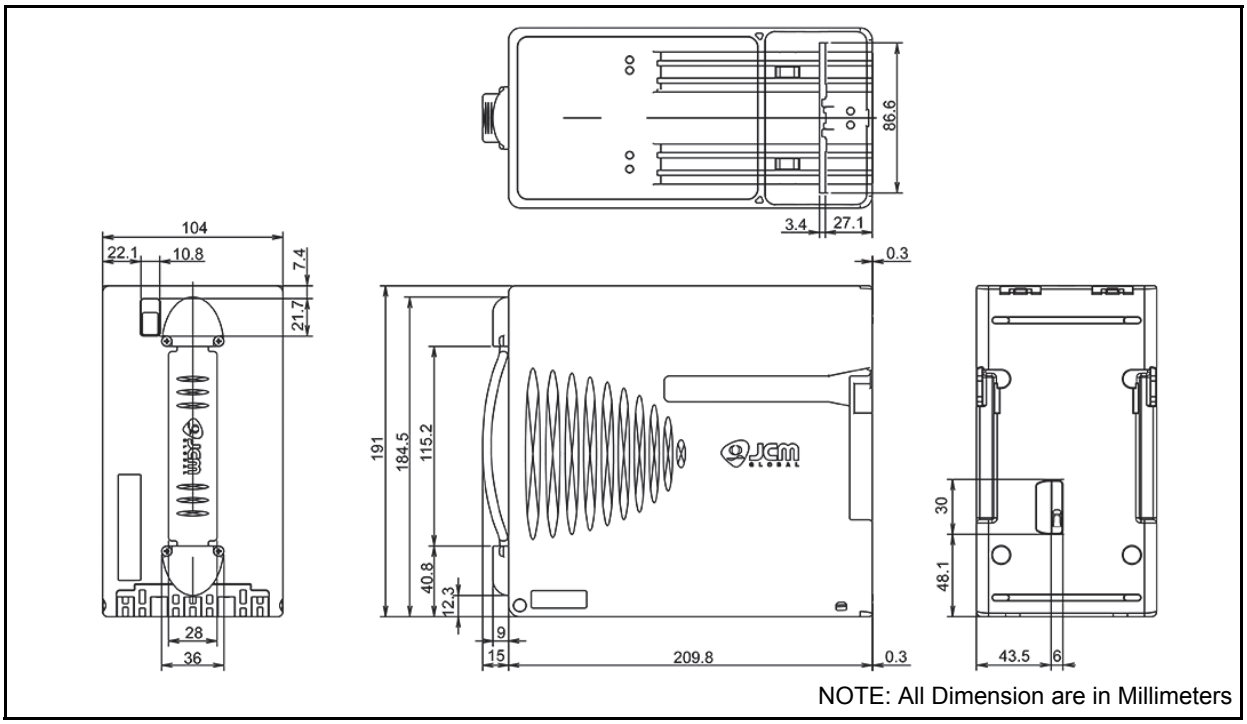

Figure 1-12 iVIZION Large Cash Box Outside Dimensions

International Compliance

- RoHS Directives or or or
- UL & c-UL Marks **File No. E142330, Subscriber 857947001, Vo.2**
- CE Mark
- CB Scheme **NO58326**
- FCC Directives .

Contains Transmitter Module
FCC ID: VZQNRWA3
MODEL NO.: NRWA3
IC: 8285A-NRWA3
This device complies with Part 15 of FCC Rules and RSS-Gen of IC Rules. Operation is subject to the following two conditions:
(1) this device may not cause interference, and
(2) this device must accept any interference, including interference that may cause undesired operation of this device.

FCC WARNING
Changes or modifications not expressly approved by the party responsible for compliance could void the user's authority to operate the equipment.

FCC NOTICE
This equipment has been tested and found to comply with the limits for a Class "A" Digital Device, pursuant to part 15 of the FCC Rules. These limits are designed to provide reasonable protection against harmful interference when the equipment is operated in a commercial environment.
This equipment generates, uses and can radiate radio frequency energy and, if not installed and used in accordance with the instructions, may cause harmful interference to radio communications. Operation of this equipment in a residential area is likely to cause harmful interference in which case the user will be required to correct the interference at his own expense.

IC NOTICE
This Class "A" Digital Apparatus complies with Canadian ICES-003.
Cet appareil numerique de la Classe "A" est conforme a la norme NMB-003 du Canada.

Technical Contact Information

AMERICAS & OCEANIA

JCM American

Phone: +1-702-651-0000

Fax: +1-702-644-5512

925 Pilot Road, Las Vegas, NV 89119

E-mail: customerservice@jcmglobal.com

EUROPE, AFRICA, RUSSIA & MIDDLE EAST

JCM Europe GmbH

Phone: +49-211-530-645-60

Fax: +49-211-530-645-65

Muendelheimer Weg 60

D-40472 Duesseldorf Germany

E-mail: support@jcmglobal.eu

UK & IRELAND

JCM Europe (UK Office)

Phone: +44 (0) 1908-377-331

Fax: +44 (0) 190-837-7834

Unit B, Third Avenue

Denbigh West Business Park

Bletchley, Milton Keynes,

Buckinghamshire MK1 1DH, UK

E-mail: info@jcmglobal.eu

ASIA

JCM Gold (HK) Ltd.

Phone: +852-2429-7187

Fax: +852-2929-7003

Unit 1-7, 3/F., Favor Industrial Centre

2-6 Kin Hong Street, Kwai Chung,

N.T. Hong Kong

E-mail: asiapactechsupport@jcmglobal.com

Japan Cash Machine Co, Limited (HQ)

Phone: +81-6-6703-8400

Fax: +81-6-6707-0348

2-3-15, Nishiwaki, Hirano-ku, Osaka 547-0035 JAPAN

E-mail: Shohin@jcm-hq.co.jp

All of these Websites are available via:
http://www.jcmglobal.com

iVIZION® Series
Next-Generation Banknote Acceptor Unit
Section 2

2 INSTALLATION

This section provides installation and operating instructions for the iVIZION® Series Next-Generation Banknote Acceptor Unit. The information within contains the following features:

- Installation Process
- DIP Switch Configurations
- Connector Pin Assignments
- Preventive Maintenance
- Clearing Banknote Jam
- Cleaning
- Interface Schematic
- Operational Flowchart.

INSTALLATION PROCESS

Mounting holes are provided in each Frame Unit to attach the iVIZION® to a related Machine during installation. Select and perform the following steps to install the iVIZION® Unit in the related Machine's particular Frame configuration:

1. Install the Interface Harness to the Frame Grounding Plate (FG PLT) (See Figure 2-1 a) using the two (2) Floating Collars (See Figure 2-1 b), the single (1) M2.6x12 W Washer (See Figure 2-1 c), the single (1) M2.6x10 W Washer (See Figure 2-1 d) and the single (1) M2.6 Nylon Nut (See Figure 2-1 e) onto the Frame Assembly. See the Figure 2-1 circled inset to visually see the assembly completed as required.

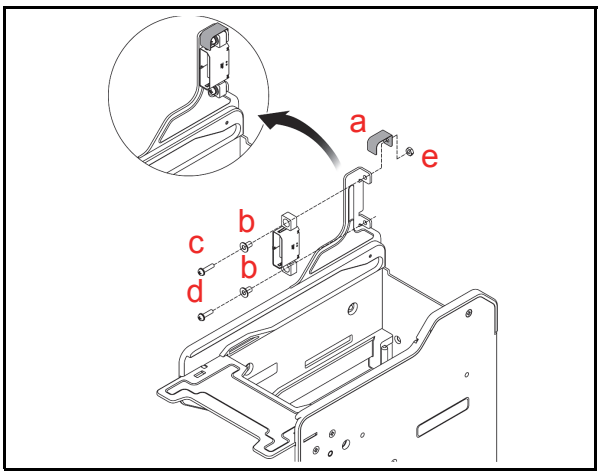

Figure 2-1 Interface Harness Installation Location

2. When a side mounting configuration is preferred, bolt the left and right side of the iVIZION® Frame into its intended related Machine's location using six (6) M4 Screws on both sides of the Frame (3 Screws on each side as shown in Figure 2-2).

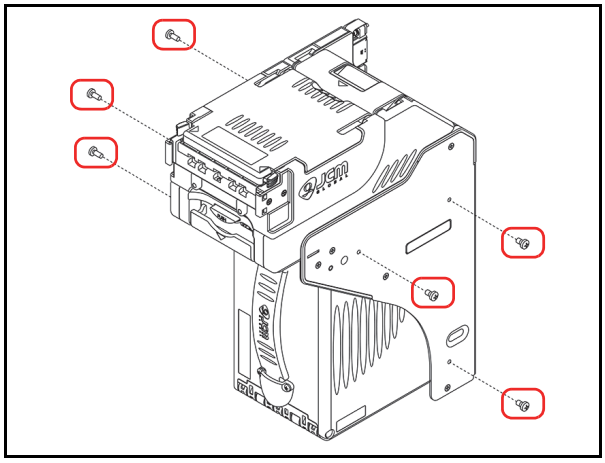

Figure 2-2 M4 Screws Locations (Left/Right Side)

3. When an end mounting configuration is preferred, remove the Cash Box and bolt the rear end of the iVIZION® Frame into its intended location using four (4) UNC6-32 Flat Head Screws from inside the back end of the Frame as shown in Figure 2-3.

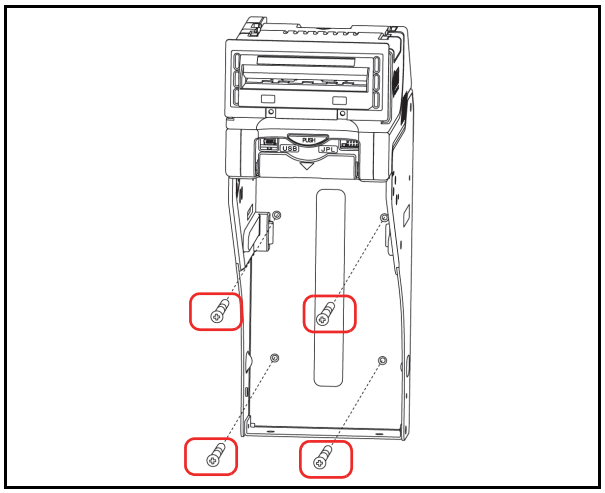

Figure 2-3 Flat Head Screws Locations (Rear Side)

When installing the iVIZION® Unit into the Host Machine, refer to the Figure 1-7 "iVIZION SS Version Unit Installation and Maintenance Space Requirements Diagram" on page 1-10 of Section 1 of this Manual.

NOTE: The length of the M4 Screws should be pre-selected so they do not puncture the Plastic Surface of the iVIZION® Frame when a side mounting configuration is preferred.

NOTE: When installing the iVIZION® LD Version Unit into a related Machine, refer to the iVIZION Optional LD Version Unit Installation detailed information on page 2-9.

Cable Interconnection

Figure 2-4 illustrates the Cable Harness interconnection requirements between the iVIZION® and a Host Machine.

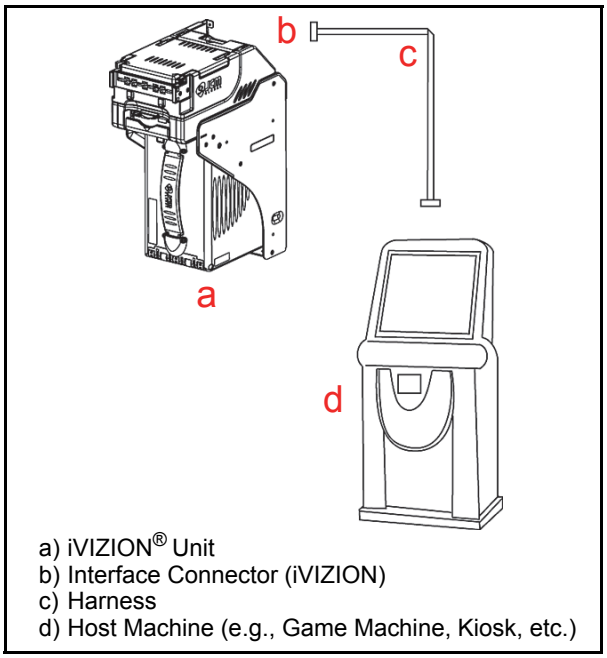

Figure 2-4 Cable Interconnection

DIP Switch Configurations

This portion provides the denomination DIP Switch Block Settings for the iVIZION® Unit.

Table 2-1 Denomination INHIBIT DIP Switch Settings

Validation CPU Board SW1

Switch No.	Switch ON	Switch OFF
1	VEND 1 INHIBIT	VEND 1 ACCEPT
2	VEND 2 INHIBIT	VEND 2 ACCEPT
3	VEND 3 INHIBIT	VEND 3 ACCEPT
4	VEND 4 INHIBIT	VEND 4 ACCEPT
5	VEND 5 INHIBIT	VEND 5 ACCEPT
6	VEND 6 INHIBIT	VEND 6 ACCEPT
7	VEND 7 INHIBIT	VEND 7 ACCEPT
8	N/A*	OFF (Fixed)

*. Not Applicable (N/A). Never Switched to ON.

Table 2-2 JCM Private Line DIP Switch Setting

Validation CPU Board JP1

Switch No.	Non-Marked (O)	Marked (C)
1	RS-485 Resistance Terminated	RS-485 Resistance Un-Terminated

Table 2-3 Software DIP Switch Settings

Controller CPU Board SW1

Switch No.	Switch ON	Switch OFF
1	N/A*	OFF (Fixed)
2	N/A*	OFF (Fixed)
3	N/A*	OFF (Fixed)
4	N/A*	OFF (Fixed)

*. Not Applicable (N/A). Never Switched to ON.

Table 2-4 Serial Communications DIP Switch Settings

Controller CPU Board JP2 & JP3

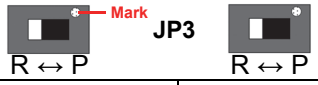

Switch No.	Non-Marked (R)	Marked (P)
JP2	RS232C	Photo-Coupler Isolation (Standard)
JP3	RS232C	Photo-Coupler Isolation (Standard)

NOTE: When changing the type of iVIZION Serial Communications, Switches JP2 and JP3 located on the Controller CPU Board must be set to identical switch positions.

PRIMARY LED INDICATIONS

The iVIZION® Unit's pair of Color LEDs illuminate when various operating and error conditions occur.

Table 2-5 LED Error Pattern Indications

No.	Condition	LED Indications	
		Power LED*	Status LED
1	OFF	Extinguished (OUT)	Extinguished (OUT)
2	Initializing	Lit Green	Blue Flashes
3	Stand-by	Lit Green	Extinguished (OUT)
4	Reject	Lit Green	Green Flashes
5	Banknote Jam	Lit Green	Yellow Flashes
6	Abnormal Error	Lit Green	Red Flashes
7	Downloading	Lit Green	Lit Red Lit Green
8	Performance Test (Stand-by)	Lit Green	Lit Blue

*. The Power LED lights Green when Power is supplied to the Unit.

Connector Pin Assignments

Table 2-6 lists the iVIZION SS/LD Interface Connector Pin Assignments.

Table 2-6 iVIZION SS/LD USB Connection Pin Assignments

Back Side View

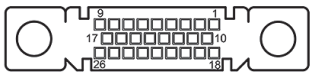

Socket Housing (Transport Unit Side): DR1B026JA1 (JCM)
Pin Housing (Frame Side): DR1R026PA1 (JCM)
Contact Type (Frame Side): D02-22-26P-10000 (JAE) (Poles except 1, 9, 18 & 26)
Recommended Wire: UL1061 AWG#26
Contact Type (Frame Side): D02-22-22P-10000 (JAE) (Pole# 1, 9, 18 & 26)
Recommended Wire: UL1061 AWG#24

Pin No.	Signal Name	I/O* †	Function
1	24V DC (POWER)	POWER	+24V DC Power
2	M-RESET	IN	Banknote Acceptor Master Reset Input Signal Line
3	USB-	IN/OUT	USB Communication Input/Output Signal Line
4	USB+	IN/OUT	USB Communication Input/Output Signal Line
5	USB GND	SG	USB Communication Ground (0V DC)
6	TTL-TXD	OUT	-
7	TTL-RXD	IN	-
8	LED POWER	OUT	LED Drive Line (anode)
9	24V DC (POWER)	POWER	+24V DC Power
10	RS232 GND	SG	-
11	TXD	OUT	-
12	I/F +12V DC	IN	Interface Power Supply (+12VDC)
13	Vbus	IN	USB Communication Vbus Signal Line (+5V DC)
14	JP+	IN/OUT	-
15	TTL-G	SG	-
16	LED-	IN	LED Drive Line (cathode)
17	ccTalk (P)	IN/OUT	-
18	POWER GND	POWER	Power Ground (0V DC)
19	I/F GND	SG	-
20	RXD	IN	-
21	DET-GND	IN	Connect to DET (Pin-22)
22	DET	OUT	Connect to DET GND (Pin-21)
23	JP-	IN/OUT	-
24	SU SELECT	IN	SS/SU Selection‡
25	ccTalk (S)	IN/OUT	-
26	POWER GND	POWER	Power Ground (0V DC)

*. I/O (Input/Output) Terminal as viewed from outside the Banknote Acceptor.

†. SG = Signal Ground.

‡. No Connection = SS Version, Connected to any SG = SU Version.

CONNECTOR PIN ASSIGNMENTS (CONTINUED 1)

Table 2-7 lists the iVIZION SS/LD Photo-Coupler Connector Pin Assignments.

Table 2-7 iVIZION SS/LD Photo-Coupler Connector Pin Assignments

Back Side View

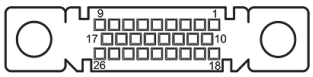

Socket Housing (Transport Unit Side): DR1B026JA1 (JCM)
Pin Housing (Frame Side): DR1R026PA1 (JCM)
Contact Type (Frame Side): D02-22-26P-10000 (JAE) (Poles except 1, 9, 18 & 26)
Recommended Wire: UL1061 AWG#26
Contact Type (Frame Side): D02-22-22P-10000 (JAE) (Pole# 1, 9, 18 & 26)
Recommended Wire: UL1061 AWG#24

Pin No.	Signal Name	I/O* †	Function
1	24V DC (POWER)	POWER	+24V DC Power
2	M-RESET	IN	Banknote Acceptor Master Reset Input Signal Line
3	USB-	IN/OUT	-
4	USB+	IN/OUT	-
5	USB GND	SG	-
6	TTL-TXD	OUT	-
7	TTL-RXD	IN	-
8	LED POWER	OUT	LED Drive Line (anode)
9	24V DC (POWER)	POWER	+24V DC Power
10	RS232 GND	SG	-
11	TXD	OUT	Sereal Communication Output Signal Line
12	I/F +12V DC	IN	Interface Power Supply (+12VDC)
13	Vbus	IN	-
14	JP+	IN/OUT	-
15	TTL-G	SG	-
16	LED-	IN	LED Drive Line (cathode)
17	ccTalk (P)	IN/OUT	-
18	POWER GND	POWER	Power Ground (0V DC)
19	I/F GND	SG	Photo-Coupler Communication GND
20	RXD	IN	Serial Communication Input Signal Line
21	DET-GND	IN	Connect to DET (Pin-22)
22	DET	OUT	Connect to DET GND (Pin-21)
23	JP-	IN/OUT	-
24	SU SELECT	IN	SS/SU Selection‡
25	ccTalk (S)	IN/OUT	-
26	POWER GND	POWER	Power Ground (0V DC)

*. I/O (Input/Output) Terminal as viewed from outside the Banknote Acceptor.

†. SG = Signal Ground.

‡. No Connection = SS Version, Connected to any SG = SU Version.

CONNECTOR PIN ASSIGNMENTS (CONTINUED 2)

Table 2-8 lists the iVIZION SS/LD RS232C Connector Pin Assignments.

Table 2-8 iVIZION SS/LD RS232C Connector Pin Assignments

Back Side View

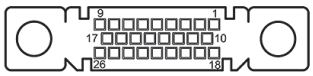

Socket Housing (Transport Unit Side): DR1B026JA1 (JCM)
Pin Housing (Frame Side): DR1R026PA1 (JCM)
Contact Type (Frame Side): D02-22-26P-10000 (JAE) (Poles except 1, 9, 18 & 26)
Recommended Wire: UL1061 AWG#26
Contact Type (Frame Side): D02-22-22P-10000 (JAE) (Pole# 1, 9, 18 & 26)
Recommended Wire: UL1061 AWG#24

Pin No.	Signal Name	I/O* †	Function
1	24V DC (POWER)	POWER	+24V DC Power
2	M-RESET	IN	Banknote Acceptor Master Reset Input Signal Line
3	USB-	IN/OUT	-
4	USB+	IN/OUT	-
5	USB GND	SG	-
6	TTL-TXD	OUT	-
7	TTL-RXD	IN	-
8	LED POWER	OUT	LED Drive Line (anode)
9	24V DC (POWER)	POWER	+24V DC Power
10	RS232C GND	SG	RS232C Communication Ground
11	TXD	OUT	Serial Communication Output Signal Line
12	I/F + 12V DC	IN	Interface Power Supply (+12V DC)
13	Vbus	IN	-
14	JP+	IN/OUT	-
15	TTL-G	SG	-
16	LED-	IN	LED Drive Line (cathode)
17	ccTalk (P)	IN/OUT	-
18	POWER GND	POWER	Power Ground (0V DC)
19	I/F GND	SG	-
20	RXD	IN	Serial Communication Input Signal Line
21	DET-GND	IN	Connect to DET (Pin-22)
22	DET	OUT	Connect to DET GND (Pin-21)
23	JP-	IN/OUT	-
24	SU SELECT	IN	SS/SU Selection‡
25	ccTalk (S)	IN/OUT	-
26	POWER GND	POWER	Power Ground (0V DC)

*. I/O (Input/Output) Terminal as viewed from outside the Banknote Acceptor.

†. SG = Signal Ground

‡. No Connection = SS Version, Connected to any SG = SU Version.

CONNECTOR PIN ASSIGNMENTS (CONTINUED 3)

Table 2-9 lists the iVIZION SS/LD ccTalk Connector Pin Assignments.

Table 2-9 iVIZION SS/LD ccTalk Connector Pin Assignments

Back Side View

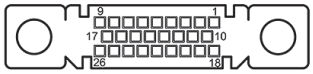

Socket Housing (Transport Unit Side): DR1B026JA1 (JCM)
Pin Housing (Frame Side): DR1R026PA1 (JCM)
Contact Type (Frame Side): D02-22-26P-10000 (JAE) (Poles except 1, 9, 18 & 26)
Recommended Wire: UL1061 AWG#26
Contact Type (Frame Side): D02-22-22P-10000 (JAE) (Pole# 1, 9, 18 & 26)
Recommended Wire: UL1061 AWG#24

Pin No.	Signal Name	I/O* †	Function
1	24V DC (POWER)	POWER	+24V DC Power
2	M-RESET	IN	Banknote Acceptor Master Reset Input Signal Line
3	USB-	IN/OUT	-
4	USB+	IN/OUT	-
5	USB GND	SG	-
6	TTL-TXD	OUT	-
7	TTL-RXD	IN	-
8	LED POWER	OUT	LED Drive Line (anode)
9	24V DC (POWER)	POWER	+24V DC Power
10	RS232C GND	SG	-
11	TXD	OUT	-
12	I/F + 12V DC	IN	Interface Power Supply (+12VDC)
13	Vbus	IN	-
14	JP+	IN/OUT	-
15	TTL-G	SG	-
16	LED-	IN	LED Drive Line (cathode)
17	ccTalk (P)	IN/OUT	ccTalk Communication Power Supply Line
18	POWER GND	POWER	Power Ground (0V DC)
19	I/F GND	SG	-
20	RXD	IN	-
21	DET-GND	IN	Connect to DET (Pin-22)
22	DET	OUT	Connect to DET GND (Pin-21)
23	JP-	IN/OUT	-
24	SU SELECT	IN	SS/SU Selection‡
25	ccTalk (S)	IN/OUT	ccTalk Communication Signal Line
26	POWER GND	POWER	Power Ground (0V DC)

*. I/O (Input/Output) Terminal as viewed from outside the Banknote Acceptor.

†. SG = Signal Ground.

‡. No Connection = SS Version, Connected to any SG = SU Version.

CONNECTOR PIN ASSIGNMENTS (CONTINUED 4)

Table 2-10 lists the iVIZION SS/LD TTL Connector Pin Assignments.

Table 2-10 iVIZION SS/LD TTL Connector Pin Assignments

Back Side View

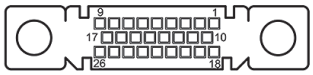

Socket Housing (Transport Unit Side): DR1B026JA1 (JCM)
Pin Housing (Frame Side): DR1R026PA1 (JCM)
Contact Type (Frame Side): D02-22-26P-10000 (JAE) (Poles except 1, 9, 18 & 26)
Recommended Wire: UL1061 AWG#26
Contact Type (Frame Side): D02-22-22P-10000 (JAE) (Pole# 1, 9, 18 & 26)
Recommended Wire: UL1061 AWG#24

Pin No.	Signal Name	I/O* †	Function
1	24V DC (POWER)	POWER	+24V DC Power
2	M-RESET	IN	Banknote Acceptor Master Reset Input Signal Line
3	USB-	IN/OUT	-
4	USB+	IN/OUT	-
5	USB GND	SG	-
6	TTL-TXD	OUT	TTL Communication Output Signal Line
7	TTL-RXD	IN	TTL Communication Input Signal Line
8	LED POWER	OUT	LED Drive Line (anode)
9	24V DC (POWER)	POWER	+24V DC Power
10	RS232C GND	SG	-
11	TXD	OUT	-
12	I/F + 12V DC	IN	Interface Power Supply (+12VDC)
13	Vbus	IN	-
14	JP+	IN/OUT	-
15	TTL-G	SG	-
16	LED-	IN	LED Drive Line (cathode)
17	ccTalk (P)	IN/OUT	-
18	POWER GND	POWER	Power Ground (0V DC)
19	I/F GND	SG	-
20	RXD	IN	-
21	DET-GND	IN	Connect to DET (Pin-22)
22	DET	OUT	Connect to DET GND (Pin-21)
23	JP-	IN/OUT	-
24	SU SELECT	IN	SS/SU Selection‡
25	ccTalk (S)	IN/OUT	-
26	POWER GND	POWER	Power Ground (0V DC)

*. I/O (Input/Output) Terminal as viewed from outside the Banknote Acceptor.

†. SG = Signal Ground.

‡. No Connection = SS Version, Connected to any SG = SU Version.

CONNECTOR PIN ASSIGNMENTS (CONTINUED 5)

Table 2-11 lists the iVIZION SS/LD Bezel Connector Pin Assignments.

Table 2-11 iVIZION SS/LD Bezel JPL (CN7) Connection Pin Assignments

Front Side View

Box Pin Header (Control CPU Board Side): A3B-8PA-2DS (71) (HRS) JCM Custom
Socket Housing (Bezel Side): A3B-8D-2C (HRS)
Contact Type (Bezel Side): A3B-2630SCFC (HRS)
Polarizing Pin: A3-GPIN (HRS)*
Recommended Wire: UL1007 AWG#24~30

Pin No.	Signal Name	I/O†	Function
1	JP+	IN/OUT	-
2	-	-	Polarizing Pin Key
3	JP-	IN/OUT	-
4	5V DC	OUT	5V DC Power Supply (Maximum 300mA)
5	VIN	OUT	LED Drive Power Supply 12V DC/24V DC (Maximum 300mA)
6	GND	SG	-
7	LED POWER	OUT	LED Power Supply 5V (Maximum 20mA Current Limitation Resistance)
8	LED 1	IN	LED Drive Line (cathode) Maximum Sink Current: 300mA

*. Caution: The Embossed Numbers located on the Polarizing Pin Connector, and on the CN7 Connector Numbers indicated in Table 17 are different. The Polarizing Pin Key should be inserted into Pin Position No.4 of the Polarizing Pin Connector.

†. I/O (Input/Output) Terminal as viewed from outside the Banknote Acceptor.

Preventive Maintenance

RETRIEVING BANKNOTES

To retrieve Cash Box deposited Banknotes perform the following steps:

1. Release the Cash Box from the Frame and pull it forward.
2. Unlock the Cash Box with a User supplied Key.
3. Open the Cash Box Door and retrieve deposited Banknotes as illustrated in Figure 2-5.

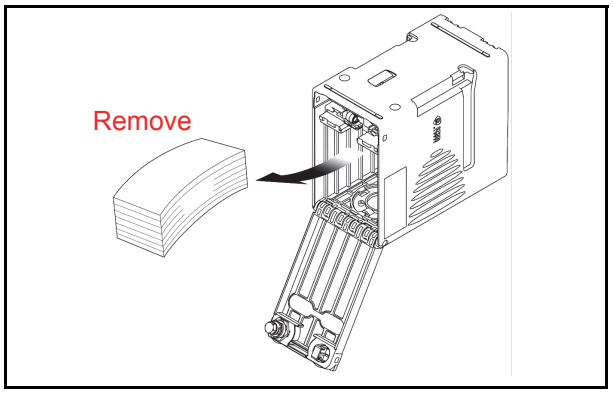

Figure 2-5 Retrieving Banknote

CLEARING A BANKNOTE JAM

To retrieve a jammed Banknote jammed inside the Banknote Acceptor Head Part proceed as follows:

1. Open the Acceptor Unit's Upper Guide by pressing in on the two (2) Upper Guide Access Buttons (See Figure 2-6a Blue Arrows) located on each side of the Upper Guide, and lift the Acceptor top up and open and remove the jam.
2. Remove the jammed Banknote. If the jammed Banknote is not found in the Acceptor Unit, then
3. Open the Transport Unit's Upper Guide by pressing in on the Upper Guide Access Lever (See Figure 2-6b single Blue Arrow) located in the center of the Upper Guide, and lift the Transport Section up and open and remove the jam.

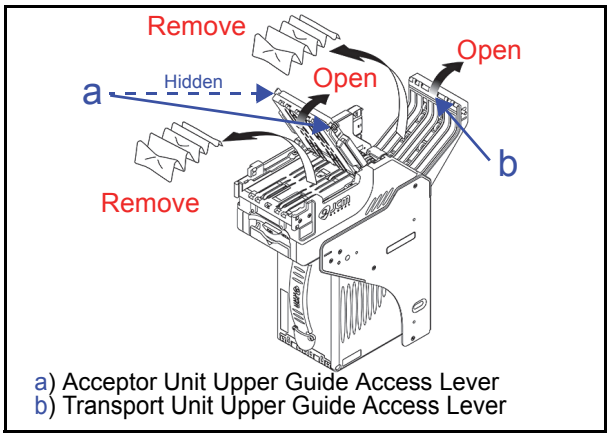

Figure 2-6 Open the Upper Guides

4. If the jammed Banknote is not found in the higher Sections, pull the Cash Box out of the Frame (See Figure 2-7 a). Check at the rear side of the Frame and remove the jammed Banknote located there if any (See Figure 2-7 b).
5. A jammed Banknote may also be present on top of the Cash Box; remove it if present at this location (See Figure 2-7 c).

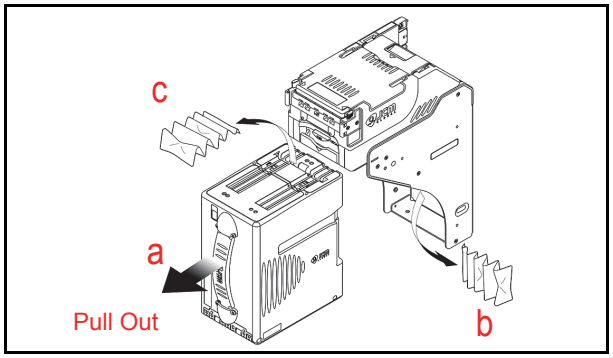

Figure 2-7 Retrieving Cash Box Banknote Jam

Cleaning Procedure

To clean the lenses, use a lint-free, Micro-Fiber Cloth and a mild non-abrasive detergent such as liquid dish soap mixed with water to wipe the dirt from the Lenses. It is important to keep the Banknote Path, Rollers, and Belts clean. Use a soft-lint free, Micro-Fiber Cloth or a Cotton Swab to wipe dirt and stains from the surfaces of the Optical Sensors, Rollers and Belts. The Sensor Lenses are transparent, and made of a polymer material; Handle them with care. When the Unit is exposed to liquid such as water, wipe and thermally dehydrate dry the wet areas immediately. Repeat the cleaning process as needed until the Transport Path is free of contaminants.

Caution: Do not allow any fluid to remain on internal components, especially on the Anti-Strings Mechanism and in the Feed-in Sensor's grooved areas.

Sensor Cleaning Procedure

1. Turn the iVIZION® Unit Power OFF.
2. Clean the Sensors and lenses in the Acceptor Unit, the Transport Unit and on the Cash Box itself. If necessary, remove each Unit and/or open their Upper Guides for cleaning. See Figure 2-10 and Table 2-12 to locate all cleaning locations.

Caution: Do not use Alcohol, thinner or citrus based products for cleaning any Banknote transport Sensors or surfaces. The lenses can become clouded by chemical evaporation resadue that may cause acceptance errors.

NOTE: When closing the Acceptor or Transport Unit's Upper Guides, ensure that they click firmly into place when being closed. Also, when reassembling the iVIZION® Unit, ensure that it re-seats correctly into place when the reassembly is complete.

iVIZION Optional LD Version Unit Installation

Mounting holes are provided in the LD Frame Unit to attach the iVIZION® LD Unit to a related Machine during installation. Perform the following steps to install the iVIZION® LD Version Unit into the related Machine's Frame configuration:

1. Install the Interface Harness to the Frame Grounding Plate (FG PLT) (See Figure 2-8 a) using the two (2) Floating Collars (See Figure 2-8 b_1 & b_2), the related single (1) M2.6x12 W Washer Screws (See Figure 2-8 c & d), and the single (1) M2.6 Nylon Nut (See Figure 2-8 e) onto the upper Frame Assembly Bracket. See the Figure 2-8 circled inset to visually see the completed assembly as required.

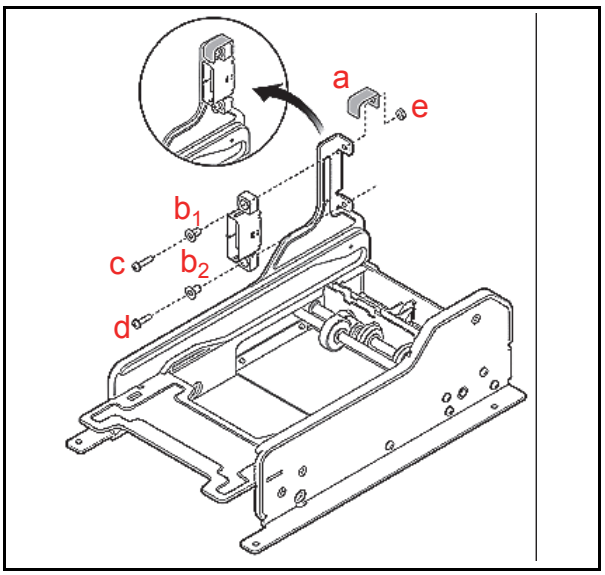

Figure 2-8 Interface Harness Installation Location

2. Bolt the bottom side of the iVIZION® LD Frame into its intended Machine's location using four (4) M3x6 Screws on both bottom sides of the Frame (2 Screws on each side as shown in Figure 2-9).

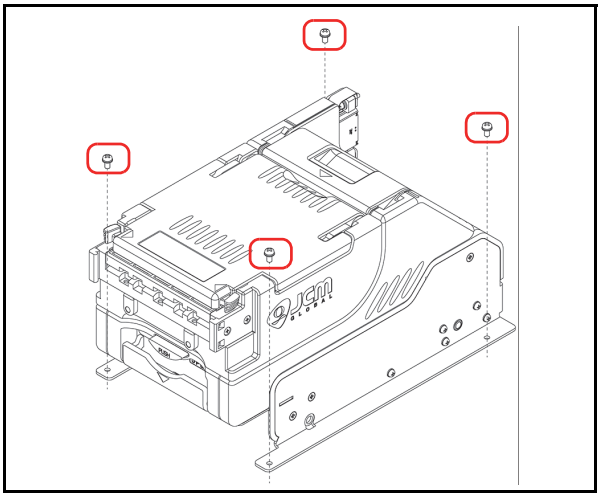

Figure 2-9 M3 Screws Locations

iVIZION Sensor Locations

Figure 2-10 illustrates and Table 2-12 lists the iVIZION® various Sensor and Sensor Lens locations.

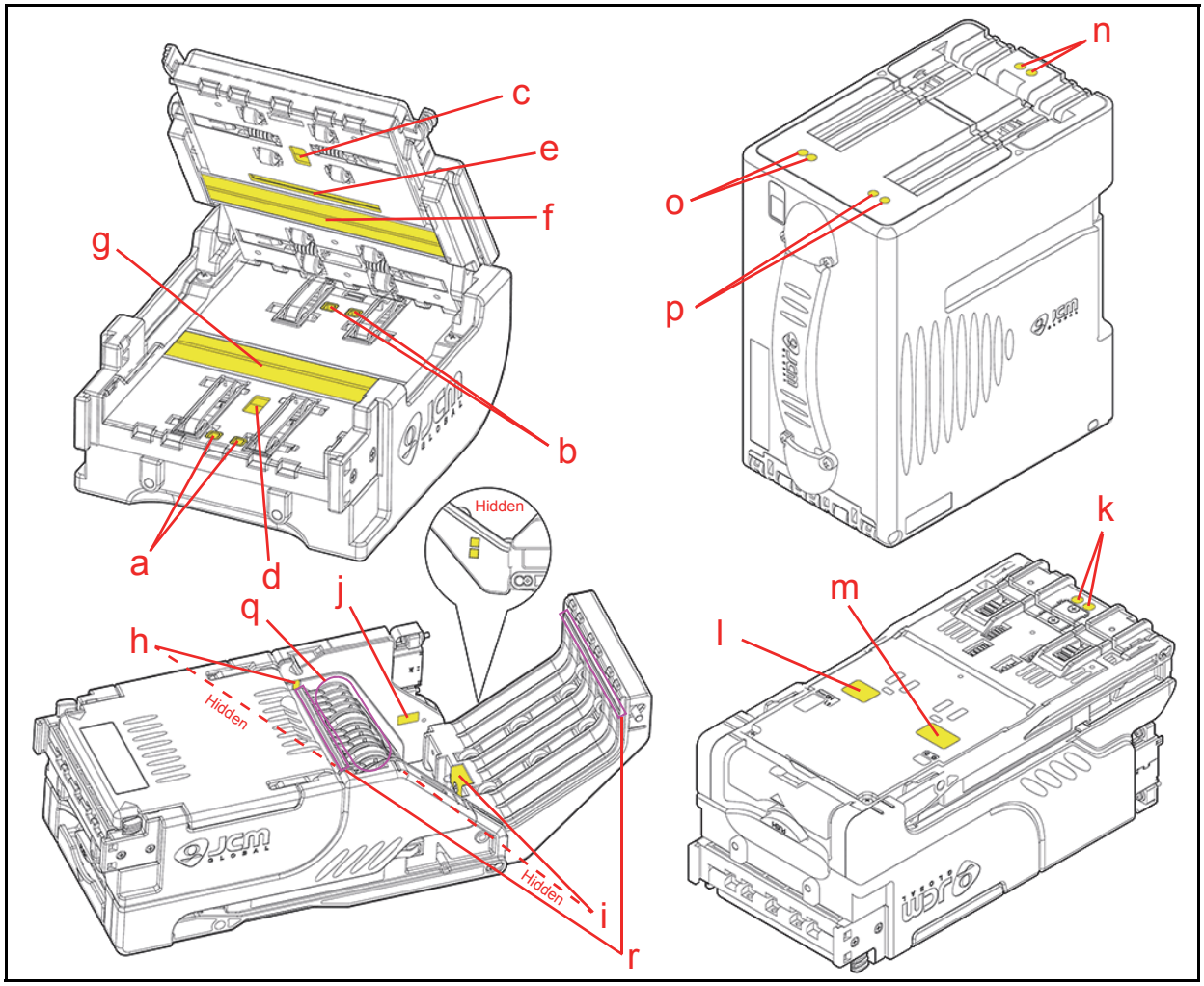

Figure 2-10 iVIZION Sensor Cleaning Locations

Table 2-12 iVIZION Sensor Cleaning Location Types

Sym.	Sensor		Cleaning Method
a	Acceptor Unit	Entrance Sensors	Wipe area clean using a lint-free cloth such as a Micro-Fiber Cloth, or blow clean using Compressed Air.
b		Exit Sensors	
c		UV Sensor (Upper)	
d		UV Sensor (Lower)	
e		Transmissive Sensor	
f		CIS Sensor (Upper)	
g		CIS Sensor (Lower)	
h	Transport Unit	Feed-in Sensors	
i		Feed-out Sensors	
j		Home Position Sensor	
k		Home Position Sensor Lens	
l		Nearly Full Sensor	
m		Cash Box Sensor	
n	Cash Box	Home Position Sensor Lens	
o		Cash Box Sensor Lens	
p		Nearly Full Sensor Lens	
q	Anti-Stringing Mechanism		
r	Feed-in Sensor's Comb Grooves		

Standard Interface Circuit Schematics

Figure 2-11 illustrates the iVIZION® USB Circuit Interface Schematic Diagrams.

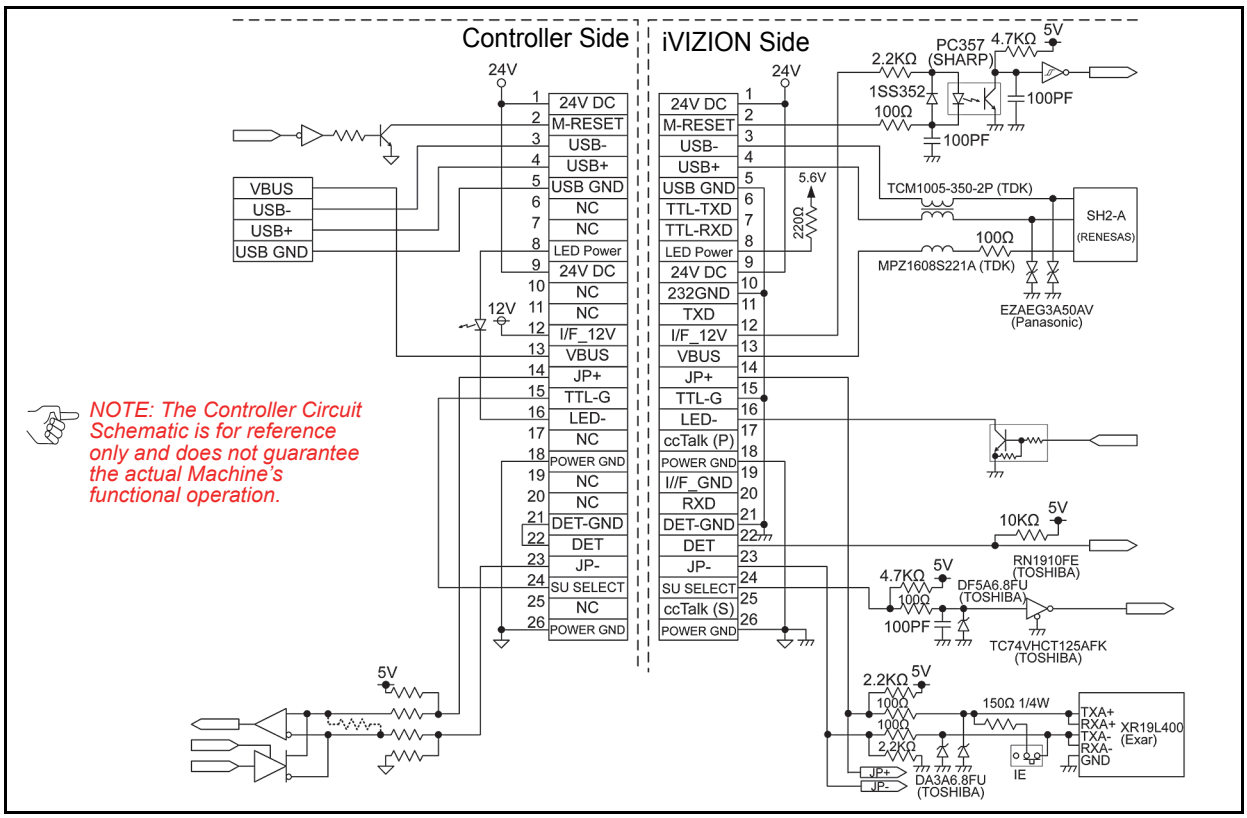

Figure 2-11 iVIZION USB Circuit Interface Schematic Diagram

Figure 2-12 illustrates the iVIZION® Photo-Coupler Isolation Circuit Interface Schematic Diagrams.

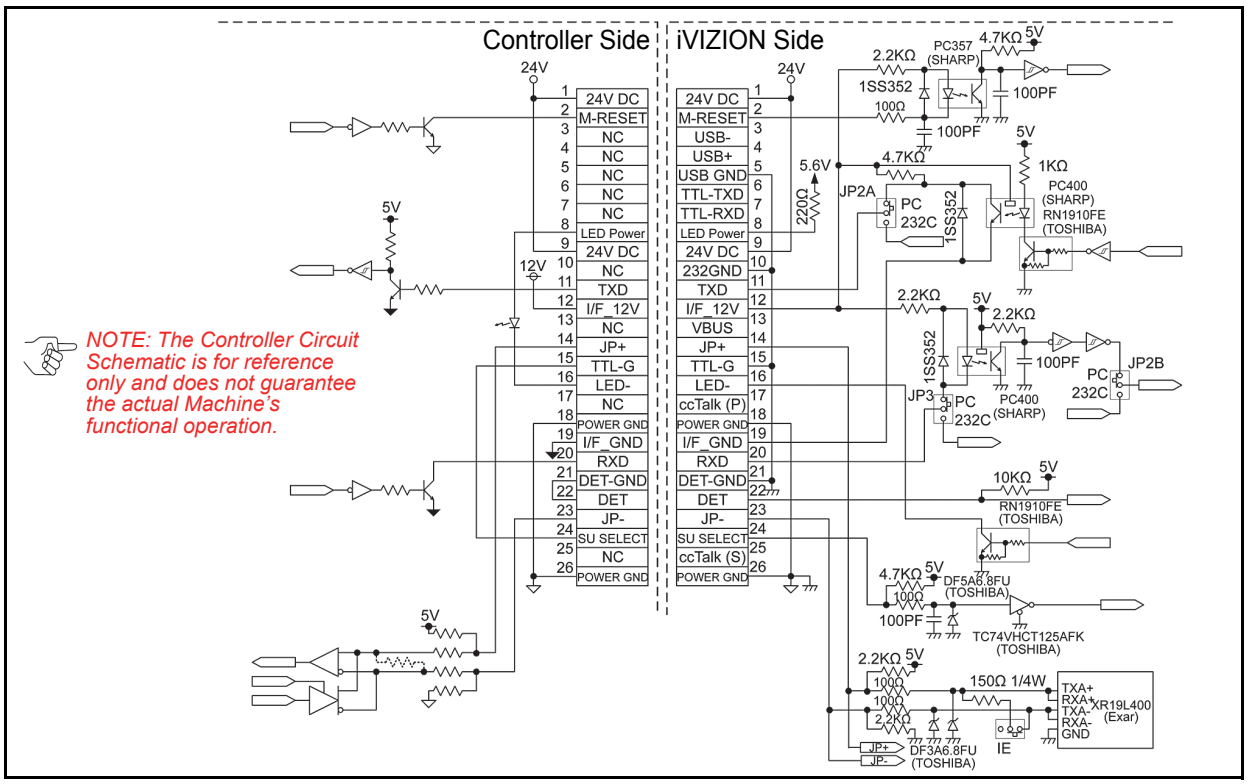

Figure 2-12 iVIZION Photo-Coupler Circuit Interface Schematic Diagram

INTERFACE CIRCUIT SCHEMATICS (CONTINUED 1)

Figure 2-13 illustrates the iVIZION® RS232C Circuit Interface Schematic Diagrams.

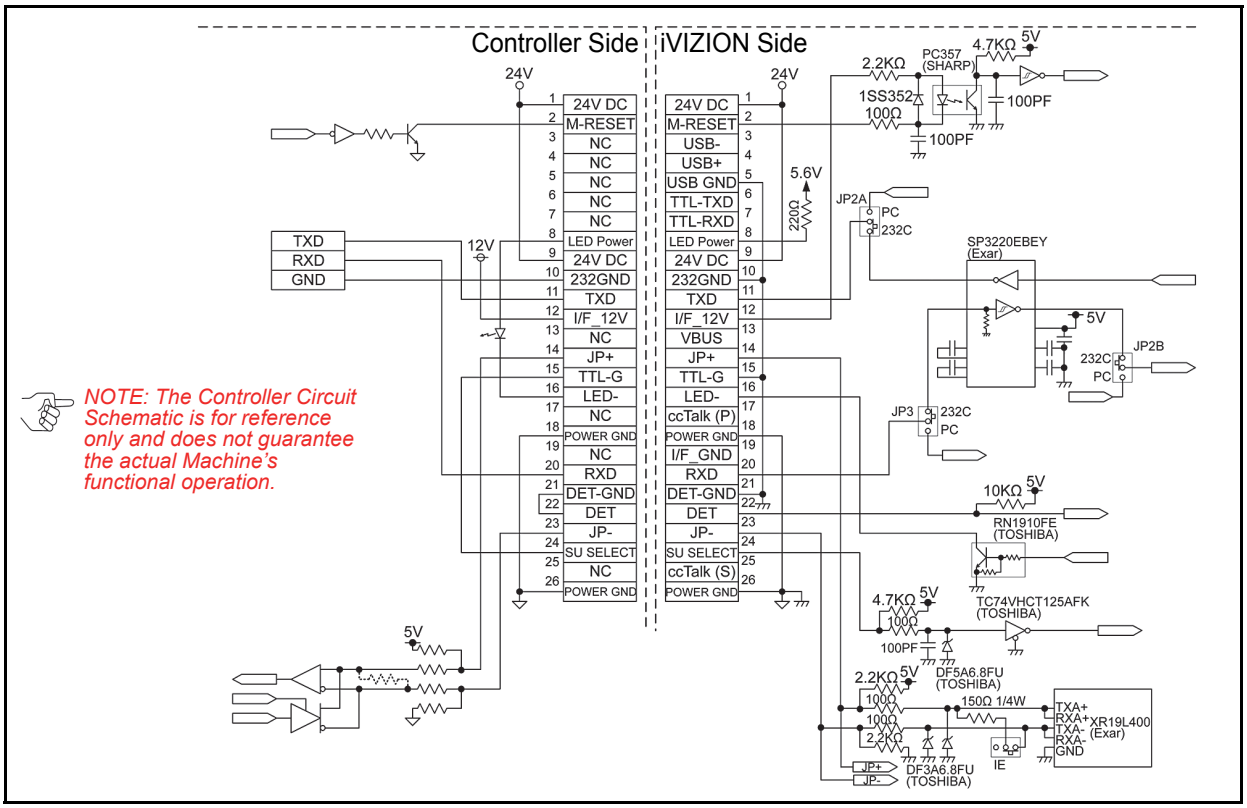

Figure 2-13 iVIZION RS232C Circuit Interface Schematic Diagram

Figure 2-14 illustrates the iVIZION® ccTalk Circuit Interface Schematic Diagrams.

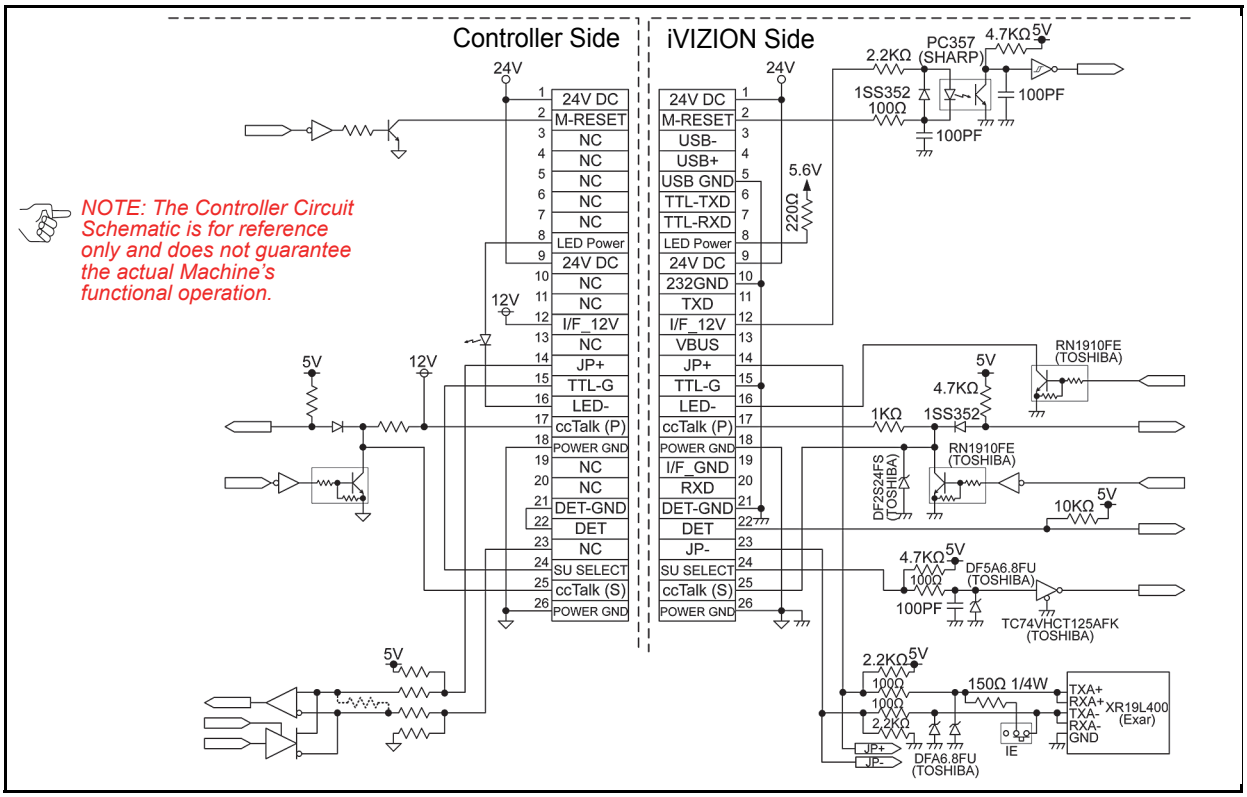

Figure 2-14 iVIZION ccTalk Circuit Interface Schematic Diagram

INTERFACE CIRCUIT SCHEMATICS (CONTINUED 2)

Figure 2-14 illustrates the iVIZION® TTL Circuit Interface Schematic Diagrams.

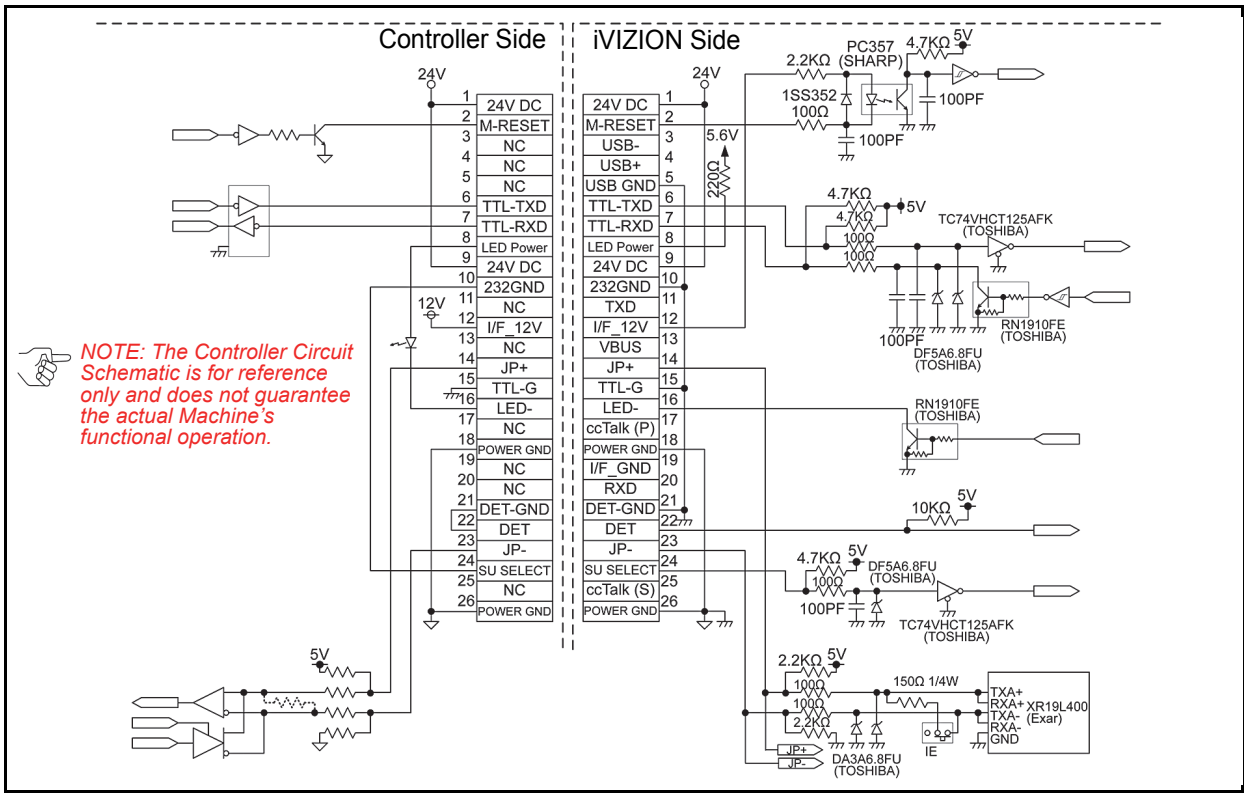

Figure 2-15 iVIZION TTL Circuit Interface Schematic Diagram

INTERFACE CIRCUIT SCHEMATICS (CONTINUED 3)

Figure 2-16 illustrates the iVIZION® LED Circuit Interface Schematic Diagrams.

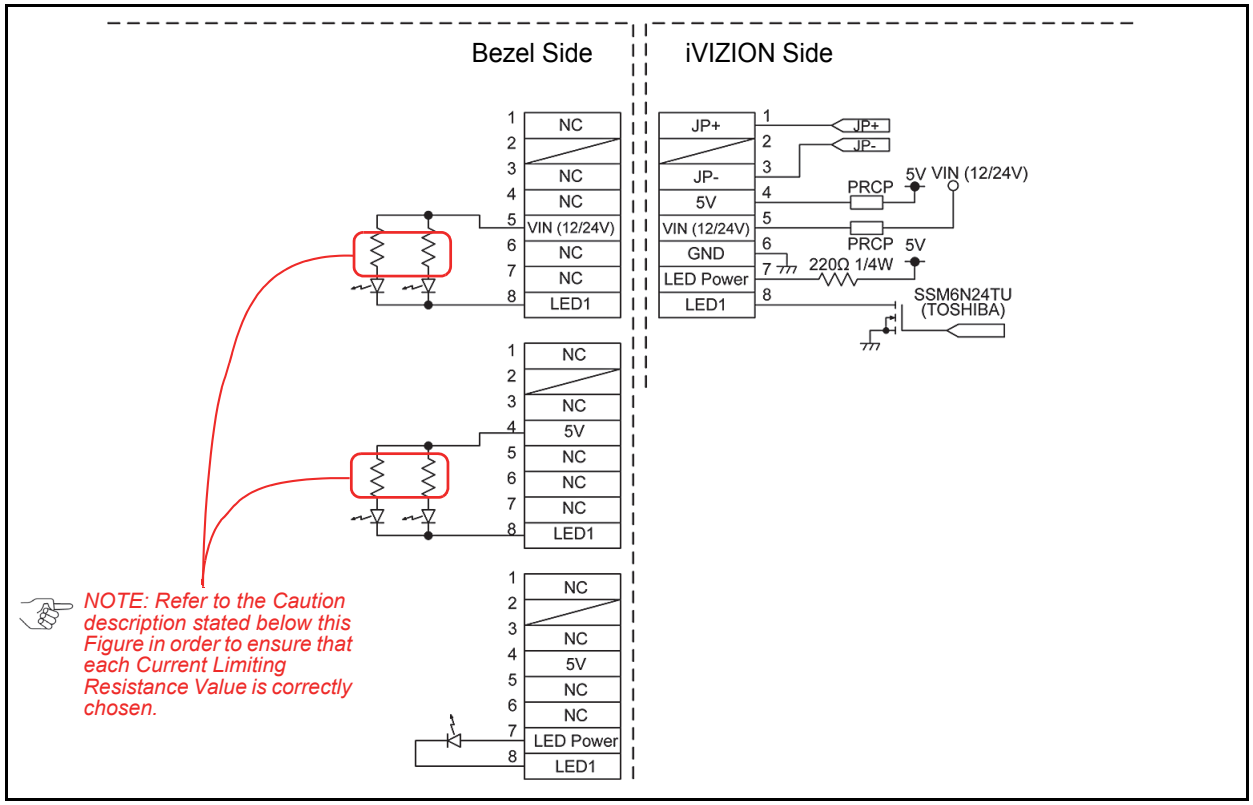

Figure 2-16 iVIZION LED Circuit Interface Schematic Diagram

Caution: Select the Current Resistance Limitation Variable depending on the Voltage at the 5th pin connected to the Machine's input Power Supply.

- Maximum Output Supply
  - 4th pin: 5V 300mA
  - 5th pin: VIN 300mA
  - 7th pin: LED Power 20mA
- Maximum Sink Current
  - 8th pin: LED1 300mA

Operational Flowchart

Figure 2-17 depicts a typical iVIZION® SS/LD Banknote acceptance flow process (Initialization).

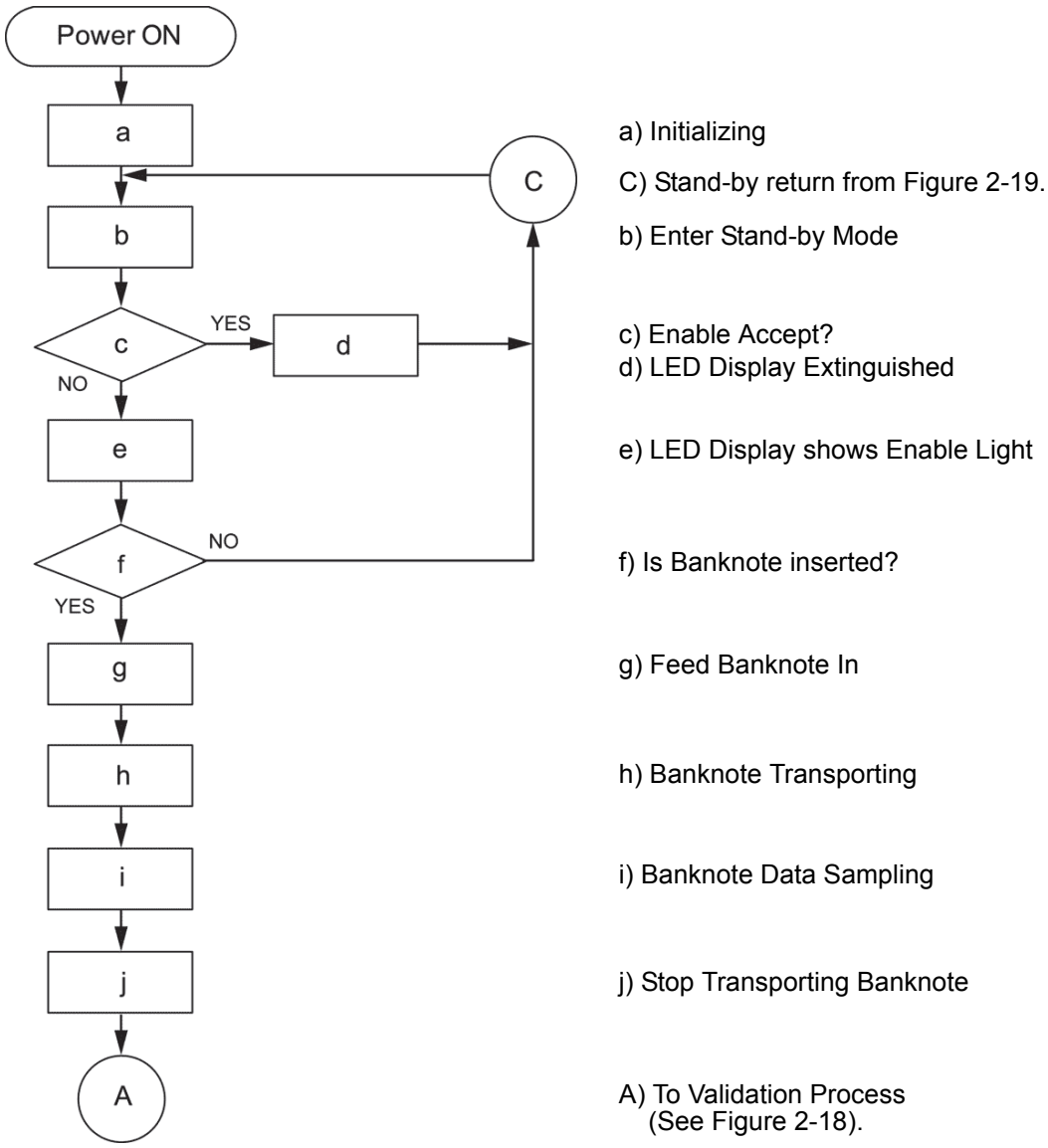

Figure 2-17 iVIZION SS/LD Banknote Acceptor Operational Flowchart (Part 1 - Initializing)

OPERATIONAL FLOWCHART (CONTINUED 1)

Figure 2-18 depicts a typical iVIZION® SS Banknote flow process (Validation).

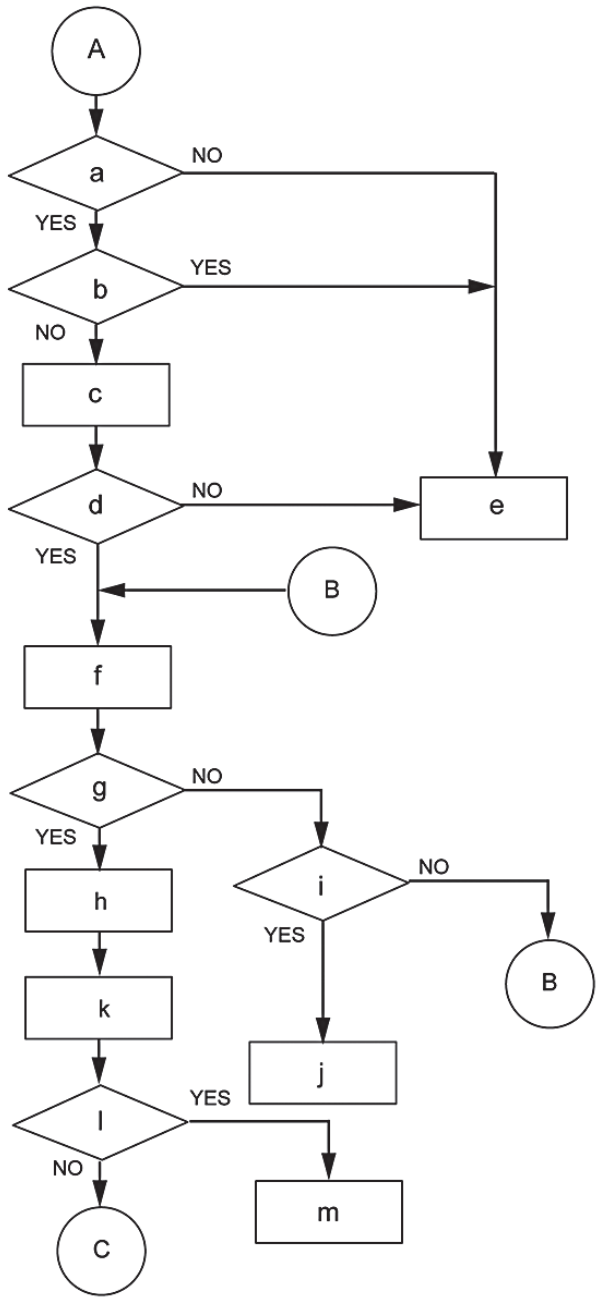

A) Begin Validating

a) Is Validation Result OK?

b) Is Banknote Unacceptable?

c) Output the Denomination Value Signal

d) Receive Stacking Command?
e) Reject Banknote

f) Continue Transporting Banknote

g) Is Banknote sent to Stacker?

h) Output a VEND Signal)

i) Retry 3 times?

j) Stop Performance: Output Abnormal Signal (*1)

k) Banknote Stacking

l) Is Stacker Full?

m) Stop Performance: Issue Output Stacker Full Signal (*2)

C) Return To Stand-by Mode (See Figure 2-17).

*1 When Abnormal Output Signal condition occurs, remove the Banknote causing the malfunction and re-apply power to the Unit, or send a Reset Command to the Banknote Acceptor.

*2 When a Stacker Full signal occurs, remove the Banknotes from the Cash Box and re-install it into its fully seated position. The iVIZION will the automatically re-initialize itself.

Figure 2-18 iVIZION SS Banknote Acceptor Operational Flowchart (Part 2 - Validating)

OPERATIONAL FLOWCHART (CONTINUED 2)

Figure 2-18 depicts a typical iVIZION® LD Banknote flow process (Validation).

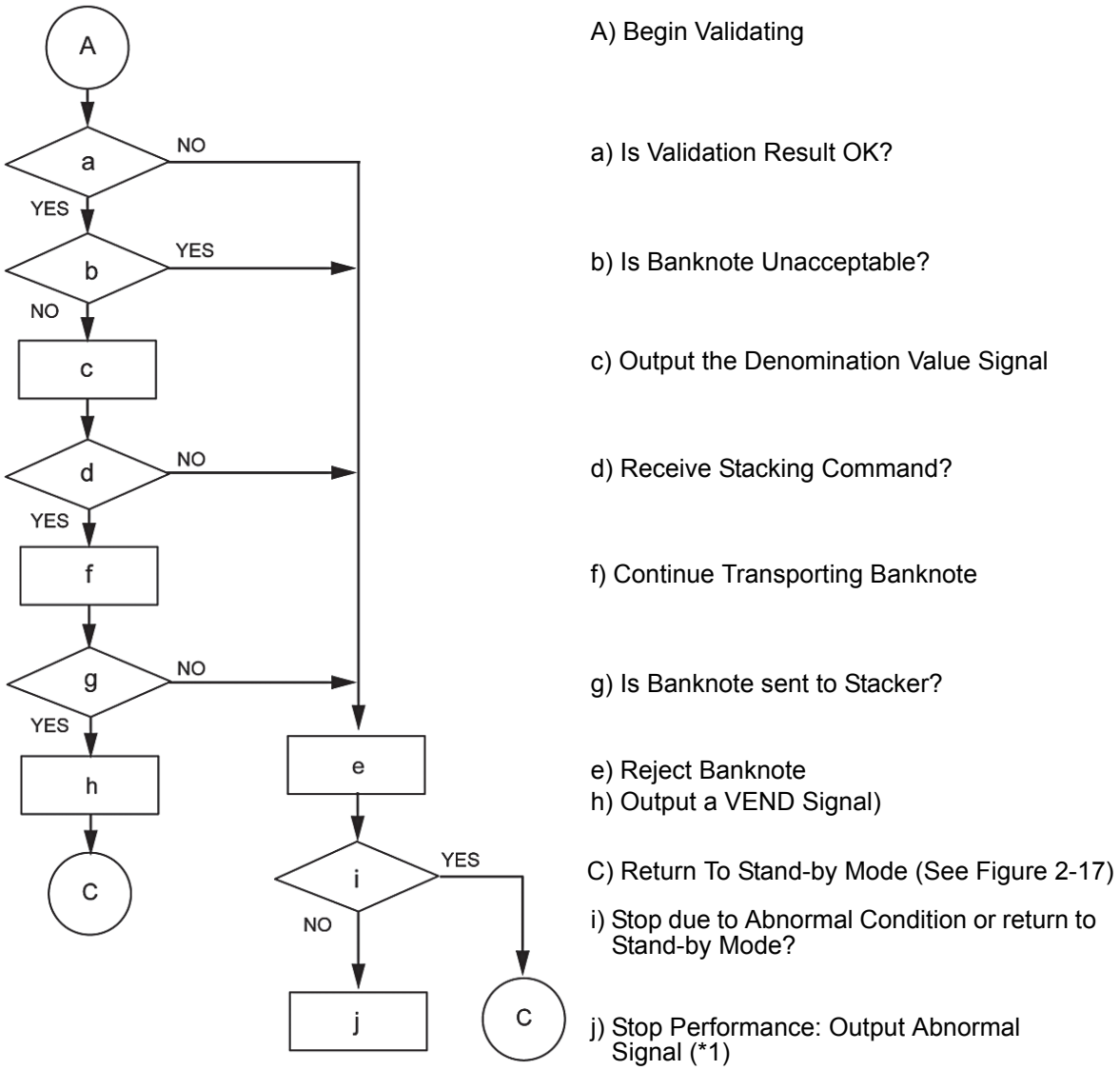

*1 When Abnormal Output Signal condition occurs, remove the Banknote causing the malfunction and re-apply power to the Unit, or send a Reset Command to the Banknote Acceptor.

Figure 2-19 iVIZION LD Banknote Acceptor Operational Flowchart (Part 2 - Validating)

THIS PAGE INTENTIONALLY LEFT BLANK

3 COMMUNICATIONS

This section was intentionally left out due to a Non-Disclosure Agreement requirement.

If this information is required, please contact the closest office location listed below:

AMERICAS & OCEANIA
JCM American
Phone: +1-702-651-0000
Fax: +1-702-644-5512
925 Pilot Road, Las Vegas, NV 89119
E-mail: customerservice@jcmglobal.com

EUROPE, AFRICA, RUSSIA & MIDDLE EAST
JCM Europe GmbH
Phone: +49-211-530-645-60
Fax: +49-211-530-645-65
Muendelheimer Weg 60
D-40472 Duesseldorf Germany
E-mail: support@jcmglobal.eu

UK & IRELAND
JCM Europe (UK Office)
Phone: +44 (0) 1908-377-331
Fax: +44 (0) 190-837-7834
Unit B, Third Avenue
Denbigh West Business Park
Bletchley, Milton Keynes,
Buckinghamshire MK1 1DH, UK
E-mail: info@jcmglobal.eu

ASIA
JCM Gold (HK) Ltd.
Phone: +852-2429-7187
Fax: +852-2929-7003
Unit 1-7, 3/F., Favor Industrial Centre
2-6 Kin Hong Street, Kwai Chung,
N.T. Hong Kong
E-mail: asiapactechsupport@jcmglobal.com

Japan Cash Machine Co, Limited (HQ)
Phone: +81-6-6703-8400
Fax: +81-6-6707-0348
2-3-15, Nishiwaki, Hirano-ku, Osaka 547-0035 JAPAN
E-mail: Shohin@jcm-hq.co.jp

All of these Websites are available via:
http://www.jcmglobal.com

THIS PAGE INTENTIONALLY LEFT BLANK

iVIZION® Series
Next-Generation Banknote Acceptor Unit
Section 4

4 DISASSEMBLY/REASSEMBLY

This section provides disassembly and reassembly instructions for the iVIZION® Next-Generation Banknote Acceptor Unit. This section contains the following information:

- Tool Requirements
- Pusher Unit Timing Belt Removal
- Home Position Sensor Board/Home Position Sensor FFC & Interface Connector Board Removals
- RFID Module & RFID Harness Removals
- Validation CPU & Controller CPU Board Removals
- USB FPC/Power FPC & Interface FPC Cable Removals
- Validation Unit Harness Removal
- Interrupter Board Removal
- Motor Unit Timing Belt Removal
- Stacker Motor & Transport Motor Removals
- Bezel Hold Chips A/B Removals
- Sensor Transfer Board/CIS FFC/Transmissive Light FFC & Upper UV FPC Sensor Removals
- Validation Sensor Board Removal
- Validation Sensor FPC Card Removal
- CIS/Transmissive Light/Upper UV Sensor Removals
- CIS/CIS FPC/Lower UV Sensor & Lower UV FFC Removals
- Validation Unit Timing Belt Removal.

Tool Requirements

The following tools will be required to perform iVIZION® disassembly and reassembly.

- #1 & #2 Phillips Screw Driver
- Set of Jewelers Phillips Screw Drivers
- #T6 “TORX” Brand Torque Wrench Driver
- #1 & #2 Torque Wrench Drivers
- Motor Gear Assembly Pressure Bar
- Pliers
- Tweezers.

Pusher Unit Timing Belt Removal

To remove the Timing Belt proceed as follows:

1. Remove the Cash Box from the iVIZION® Unit.
2. Open the Cash Box Door’s bottom access Door.
3. Remove the two (2) screws (See Figure 4-1 a_1 & a_2) retaining the Pusher Mechanism Unit to the Cash Box.

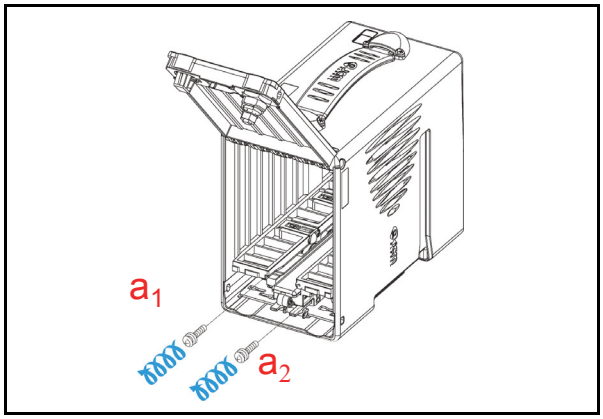

Figure 4-1 Pusher Mechanism Screws Removal

4. While pulling upward on the Door Latch Stoppers (See Figure 4-2 a_1 & a_2) of the Pusher Mechanism Unit (See Figure 4-2 b), slide it forward to remove the Pusher Mechanism Assembly out of the Cash Box.

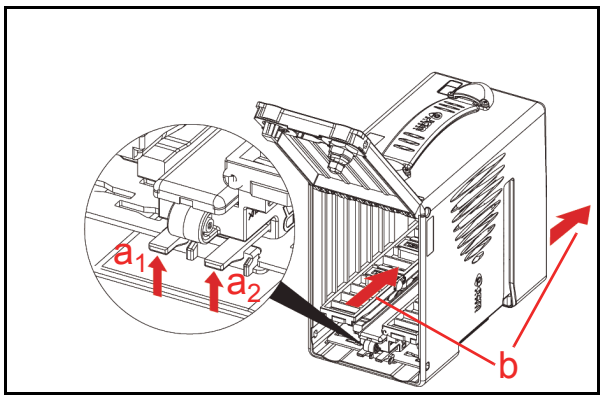

Figure 4-2 Pusher Mechanism Removal

5. Remove the four (4) screws (See Figure 4-3 a_1, a_2, a_3 & a_4) retaining the Unit Cover in place (See Figure 4-3 b), and remove the Unit Cover from the Pusher Mechanism Assembly.

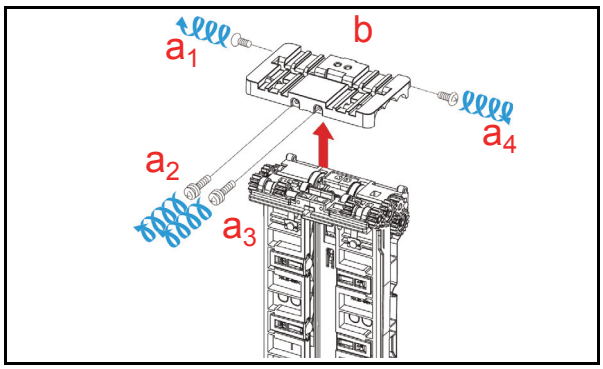

Figure 4-3 Pusher Mechanism Cover Removal

6. Remove the two (2) screws (See Figure 4-4 a_1 & a_2) retaining the two (2) Flat Leaf Springs (See Figure 4-4 b_1 & b_2). Remove the two (2) Flat Springs, the single (1) Stacker Guide (See Figure 4-4 c), the single (1) Retainer Pin (See Figure 4-4 d), the two (2) Rollers (See Figure 4-4 e_1 & e_2) and the two (2) related pressure Coil Springs (See Figure 4-4 f & Figure 4-5 below) from the Pusher Mechanism Assembly.

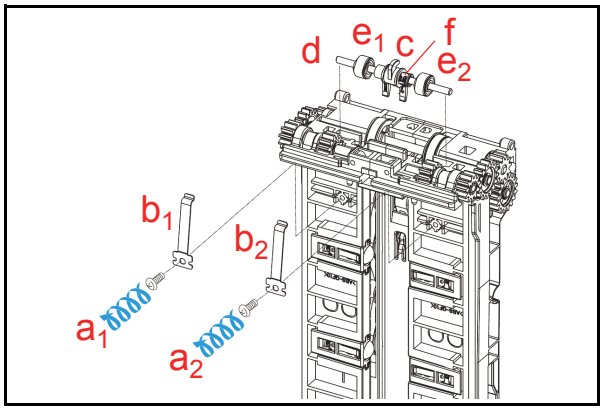

Figure 4-4 Stacker Guide Removal

NOTE: When reassembling the Stacker Guide (See Figure 4-5 a), ensure that each Coil Spring (See Figure 4-5 b) direction is replaced correctly. When reinserting the Retaining Pin, put it in place while lifting the Coil Spring upward; then put the Screw Locks back onto the Screws retaining each Coil Spring in place.

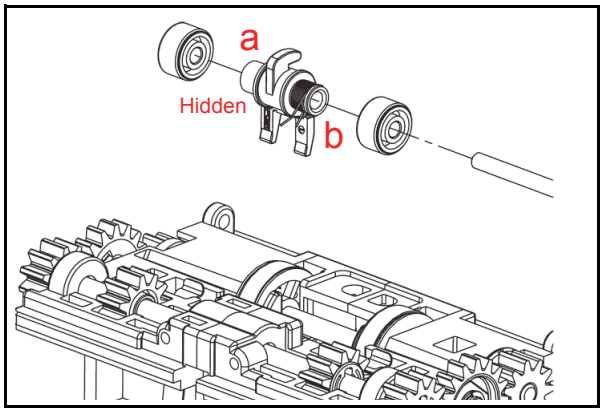

Figure 4-5 Stacker Guide Reassembly

7. Remove the single (1) E-ring (See Figure 4-6 a) and the single (1) Gear (See Figure 4-6 b) located on the right side of the Transport Unit.

NOTE: Be careful that the parallel Pins (See Figure 4-6 c) and their related Bushings (See Figure 4-6 d_1 & d_2) are not lost when removing them.

8. Remove the three (3) Assembly Mounting Screws (See Figure 4-6 e_1, e_2 & e_3) located on the right side of the Transport Unit, and remove the Right Frame Outer "R" Assembly (See Figure 4-6 f) from the Transport Unit.

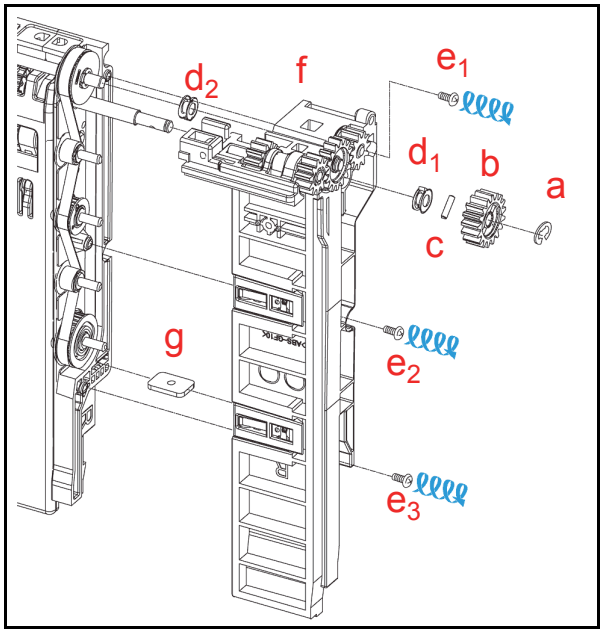

Figure 4-6 Right Frame Outer "R" Removal

NOTE: When replacing the Frame Outer "R" Assembly, ensure that the Plate Nut is correctly re-positioned (See Figure 4-6 g).

9. Remove the single (1) E-ring (See Figure 4-7 a) and the two (2) Gears (See Figure 4-7 b_1 & b_2) located on the left side of the Transport Unit.

NOTE: Be careful that the parallel Pins (See Figure 4-7 c) and their related Bushings (See Figure 4-7 d_1, d_2 & d_3) are not lost when removing them.

10. Remove the three (3) Assembly Mounting Screws (See Figure 4-7 e_1, e_2 & e_3) and remove the Left Frame Outer "L" Assembly (See Figure 4-7 f) from the Transport Unit.

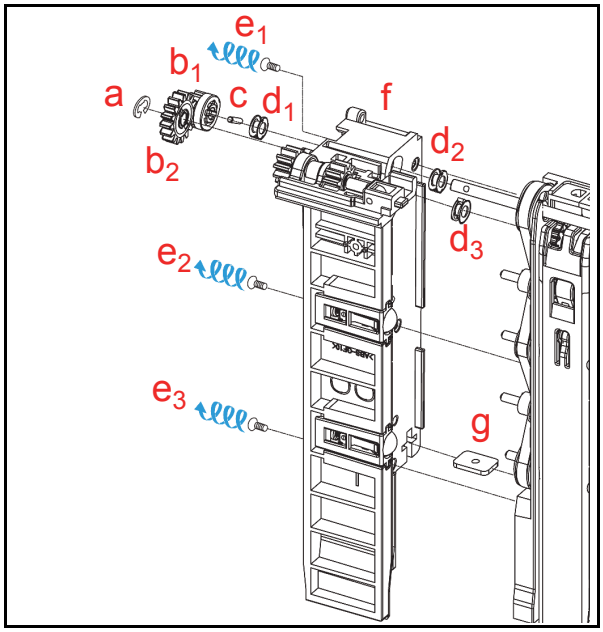

Figure 4-7 Left Frame Outer "L" Removal

NOTE: When replacing the Frame Outer "L" Assembly, ensure that the Plate Nut is correctly re-positioned (See Figure 4-7 g).

11. Remove the two (2) Timing Belts (See Figure 4-8 a_1 & a_2) from the Transport Unit.

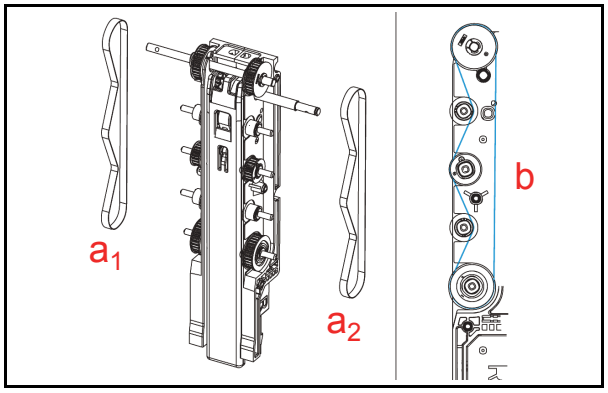

Figure 4-8 Timing Belt Removal

NOTE: The Timing Belts should be replaced as illustrated in Figure 4-8b when reassembling the Unit. Be careful that the Pulleys and/or Rollers do not accidentally fall off during reassembly.

Home Position Sensor Board/Home Position Sensor, FFC & Interface Connector Board Removals

To remove the Home Position Sensor Board, the Home Position Sensor FFC and the Interface Connector Board proceed as follows:

1. Remove the Transport Unit from the iVIZION® Unit.
2. Remove the Validation Section from the Transport Unit.
3. Remove the two (2) TR Cover mounting Screws (See Figure 4-9 a_1 & a_2) from the bottom of the Transport Unit, and remove the Transport (TR) Bottom Cover (See Figure 4-9 b) off the Transport Unit.

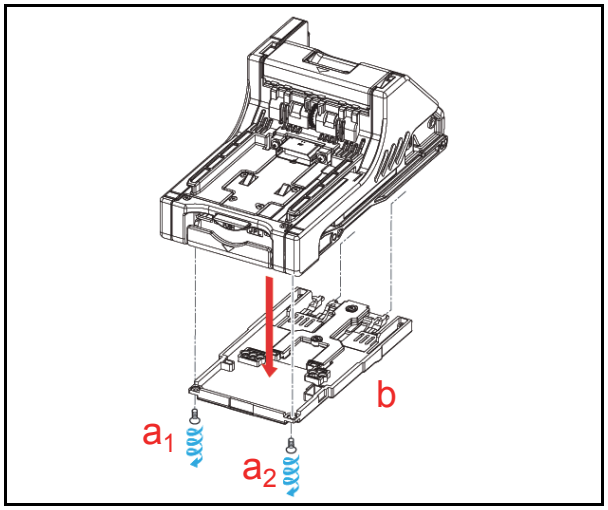

Figure 4-9 TR Bottom Cover Removal

4. Use a small Screwdriver to release the five (5) Click-tab Stops of TR Side Cover "A" (See Figure 4-10 a_1 through a_5), and remove TR Side Cover "A" (See Figure 4-10 b) from the Transport Assembly.

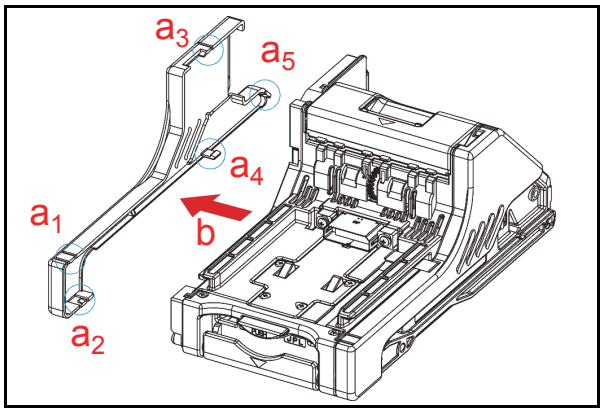

Figure 4-10 TR Side Cover "A" Removal

NOTE: When the three (3) lower Click-tab stops are difficult to remove from the top, release them from bottom-side instead.

5. Remove the two (2) mounting Screws (See Figure 4-11 a_1 & a_2) retaining the Home Position Sensor Board in place (See Figure 4-11 b).
6. Remove the Home Position Sensor Board and the Home Position Sensor FFC Assembly (See Figure 4-11 c) from the Transport Unit.
7. Remove the three (3) mounting Screws (See Figure 4-11 d_1, d_2 & d_3) retaining the Interface Connector Board in place (See Figure 4-11 f), and then remove the three (3) Flat Ribbon Cables from the Interface Connector Board (See Figure 4-11 e_1, e_2 & e_3).

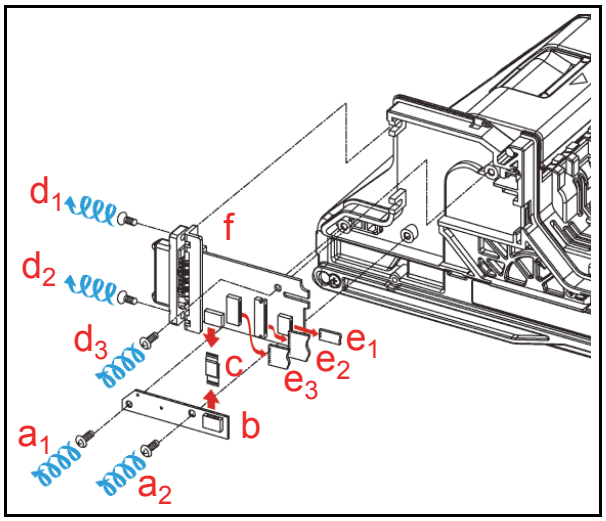

Figure 4-11 Home Position Sensor Board, Home Position Sensor FFC Assembly and Interface Connector Board Removals

RFID Module & Harness Removals

To remove the RFID Module and RFID Harness proceed as follows:

1. Remove the two (2) mounting Screws (See Figure 4-12 a_1 & a_2) retaining the RFID Module to the back side of the Transport Unit (See Figure 4-12 b).
2. Remove the RFID Module and the RFID Harness (See Figure 4-12 c) from the Transport Unit.

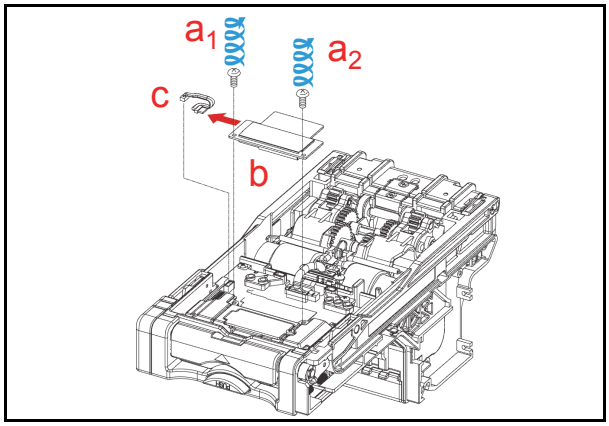

Figure 4-12 RFID Module & Harness Removal

Validation CPU & Controller CPU Board Removals

To remove the Validation CPU Board and the Controller CPU Board from the CPU Board Module, proceed as follows:

1. Remove the four (4) mounting Screws that are (See Figure 4-13 a_1 through a_4) retaining the CPU Board Module (See Figure 4-13 d) to the Transport Unit, and unplug the two (2) Signal Connectors (See Figure 4-13 b_1 & b_2) with the three (3) Flat Ribbon Cables (See Figure 4-13 c_1 , c_2 & a_3) located on the CPU Board Module and remove the CPU Board Module from the Transport Unit.

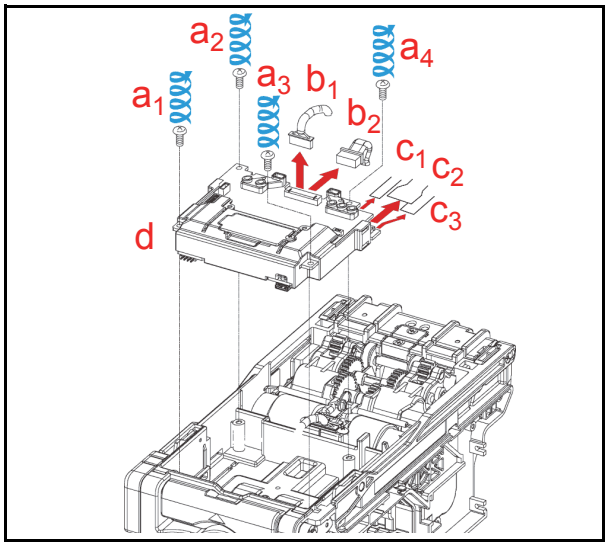

Figure 4-13 CPU Board Module Removal

2. Remove the single (1) mounting Screw (See Figure 4-14 a) and remove the Optional Extension Memory Board if installed (See Figure 4-14 b) from the assembled Extension Memory Board.

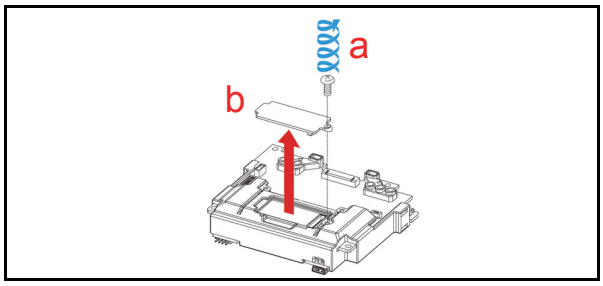

Figure 4-14 Extension Memory Board Removal

3. Carefully spread both sides of the PCB Support apart (See Figure 4-15 a_1 & a_2) and slide the Validation CPU Board (See Figure 4-15 d) and the Controller CPU Board (See Figure 4-15 c) off of the CPU Board Module.
4. Remove two (2) mounting Screws (See Figure 4-15 b_1 & b_2), and separate the Validation CPU Board and the Controller CPU Board from one another if they exist separately.

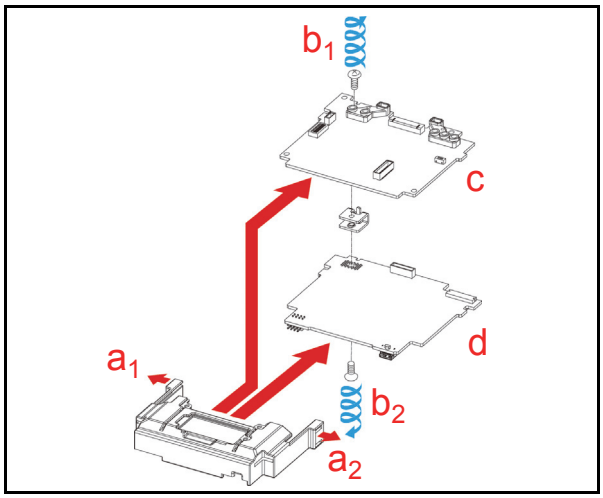

Figure 4-15 Validation CPU Board and Control CPU Board Removal

USB FPC, Power FPC & Interface FPC Cable Removals

To remove the USB FPC, the Power FPC and the Interface FPC proceed as follows:

1. Remove the two (2) mounting Screws (See Figure 4-16 a_1 & a_2) retaining the Motor Unit to the Transport Assembly, and remove the Motor Module (See Figure 4-16 b) from the Transport Unit.
2. Remove the USB FPC (See Figure 4-17 a), the Power FPC (See Figure 4-17 b) and the Interface FPC (See Figure 4-17 c) from the Transport Unit.

NOTE: Carefully observe the Up and Down Fold Line indications shown by the two (2) Cyan Arrows in Figure 4-17, and DO NOT rebend them in an opposite direction!

NOTE: When installing new FPCs, fold-up along the Solid Lines and fold-down along the Dashed Lines before setting them in place. Once an FPC is folded, DO NOT refold it back again or in the opposite direction once folded!

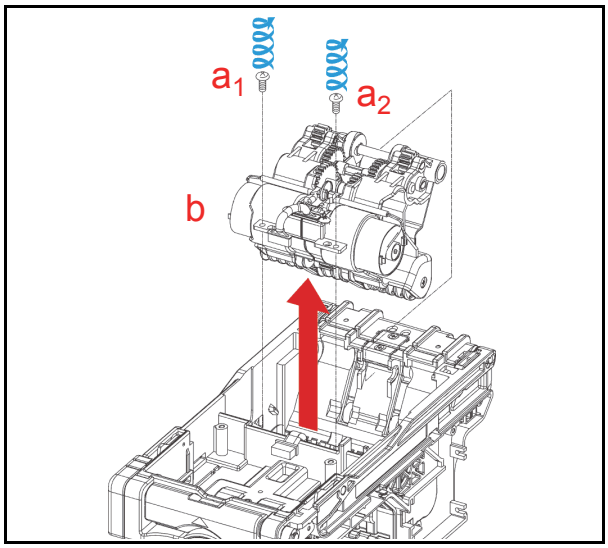

Figure 4-16 Motor Module Removal

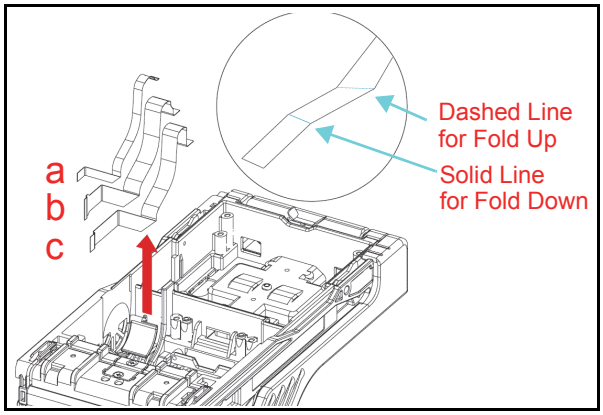

Figure 4-17 USB FPC, Power FPC & Interface FPC Cable Removal

Validation Unit Harness Removal

To remove the Validation Unit Harness proceed as follows:

1. Remove the two (2) mounting Screws (See Figure 4-18 a_1 & a_2) retaining the Validation Unit Harness in place (See Figure 4-18 b).
2. Remove the Validation Unit Harness from the Transport Unit.

NOTE: Ensure that when the Collars (See Figure 4-18 c_1 & c_2) and/or Washers are removed (See Figure 4-18 d_1 & d_2) that they are not accidentally lost once they are removed.

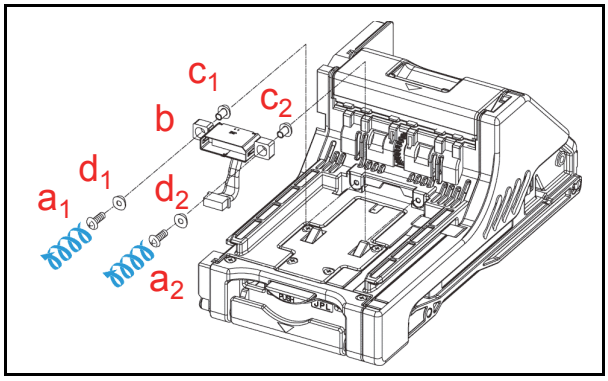

Figure 4-18 Validation Unit Harness Removal

Interrupter Board Removal

To remove the Interrupter Board proceed as follows:

1. Remove the two (2) mounting Screws (See Figure 4-19 a_1 & a_2) retaining the Interrupter Board to the Assembly (See Figure 4-19 b), and carefully unplug the three (3) Signal Connectors (See Figure 4-19 c_1, c_2 & c_3) from the Board.
2. Carefully pull the Interrupter Board off of the Motor Module Assembly.

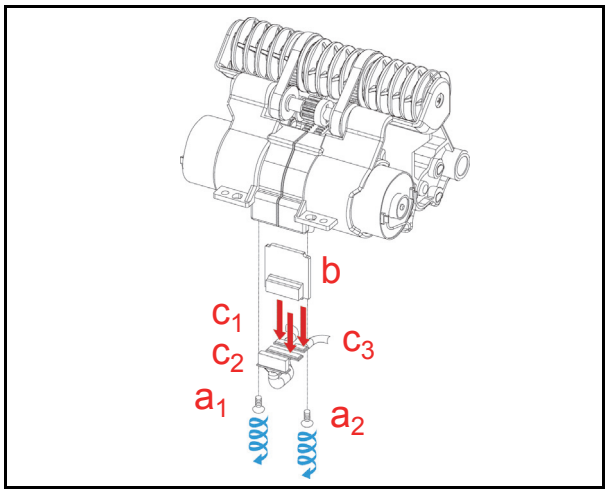

Figure 4-19 Interrupter Board Removal

Motor Unit Timing Belt Removal

To remove the Timing Belt, proceed as follows:

1. Remove the two (2) mounting Screws (See Figure 4-20 a_1 & a_2) and remove Drive Mod FR "A" (See Figure 4-20 b) from the Motor Module Assembly.

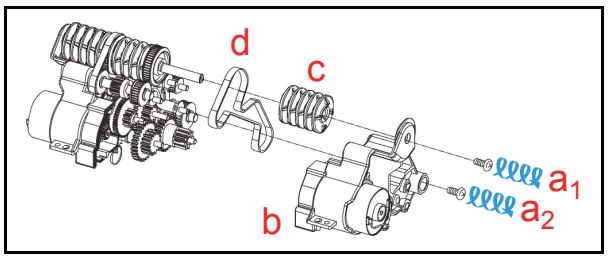

Figure 4-20 Timing Belt Removal

NOTE: When re-assembling Drive Mod FR "A", ensure that it mates directly with the "D" Plane of the Drive Shaft.

2. Remove the Belt Reel (See Figure 4-20 c) and the Timing Belt (See Figure 4-20 d) from the Motor Module Assembly.

NOTE: Follow the same procedure to remove the opposite side Timing Belt.

NOTE: The a_1 Mounting Screws should be reinstalled using a #1 (2.5kgfxcm) Torque Wrench Driver.

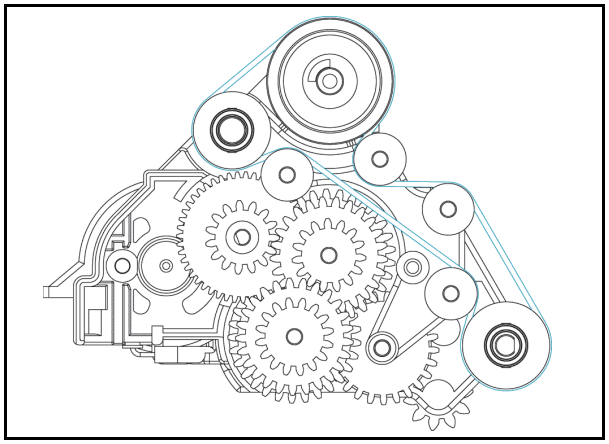

Figure 4-21 Timing Belt Reassembly Path

NOTE: The Timing Belts should be replaced as illustrated by the Blue path in Figure 4-21 when the Unit is being reassembled.

Stacker Motor & Transport Motor Removals

To remove the Stacker Motor and the Transport Motor proceed as follows:

1. Remove the Gear TR-ST Motor (See Figure 4-22 a) and the two (2) mounting Screws (See Figure 4-22 b_1 & b_2) retaining the Motor Module in place.
2. Remove the Stacker Motor (See Figure 4-22 c) from the Motor Module Assembly.

NOTE: Follow the same procedure to remove the opposite side Timing Belt.

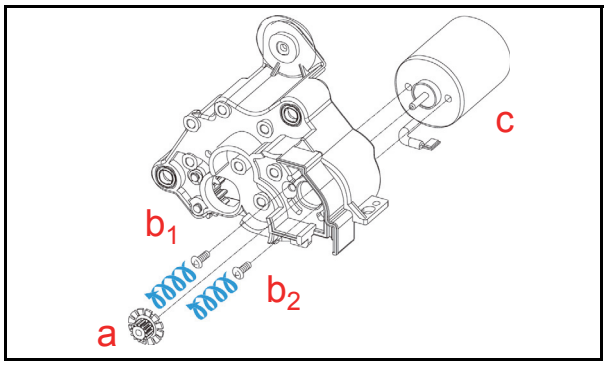

Figure 4-22 Stacker & Transport Motor Removal

NOTE: When reassembling the TR-ST Motor Gear, a Motor Gear Assembly Pressure Bar will be required.

Bezel Retainer Clips A & B Removal

To remove Bezel Retainer Clips "A" and Bezel Retainer Clips "B" proceed as follows:

1. Remove the two (2) laminated, M2.6x6 Phillips Self Tightening Screws (See Figure 4-23 a_1 and a_2) from the Bezel, and then remove Bezel Retainer Clip "A" from the left side of the Assembly (See Figure 4-23 b).
2. Remove the two (2) laminated M2.6x6 Phillips Self Tightening Screws (See Figure 4-23 a_3 and a_4) from the Bezel, and then remove Bezel Retainer Clip "B" from the right side of the Assembly (See Figure 4-23 c).

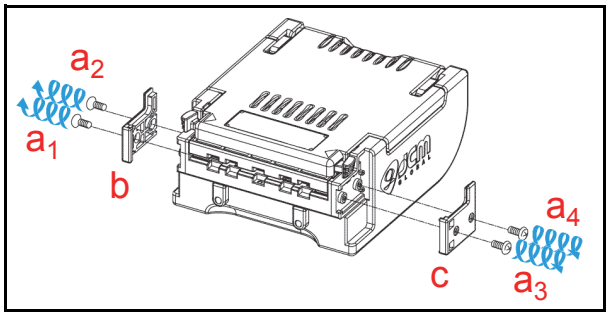

Figure 4-23 Bezel Retainer Chips A&B Removal

NOTE: Use a T6 "TORX" Torque Wrench Driver when reattaching Bezel Retainer Clips "A" and "B" onto the Transport Unit.

Sensor Transfer Board/CIS FFC/ Transmissive Light FFC & Upper UV FPC Sensor Removals

To remove the Sensor Transfer Board, the CIS FFC Sensor, the Transmissive Light FFC Sensor and the Upper UV FPC Sensor proceed as follows:

1. Open the Validation Section and release the six (6) Upper Cover Click-tab Stops (See Figure 4-24 a_1 through a_6) by using a small Screwdriver.
2. Remove the Upper Cover (See Figure 4-24 b) from the Upper Guide.
3. Remove the two (2) mounting Screws (See Figure 4-25 a_1 & a_2) retaining the Sensor Transfer Board Assembly to the Transport.
4. Remove the CIS FFC (See Figure 4-25 b), the Transmissive Light FFC (See Figure 4-25 c), and the Upper UV FPC (See Figure 4-25 d) from the Validation Head.
5. Unplug the two (2) Flat Ribbon Cables (See Figure 4-25 e_1 & e_2) and then remove the Sensor Transfer Board Assembly (See Figure 4-25 f) off of the Validation Head; then
6. Remove the CIS FFC, the Transmissive Light FFC and the Upper FPC from the Validation Unit.

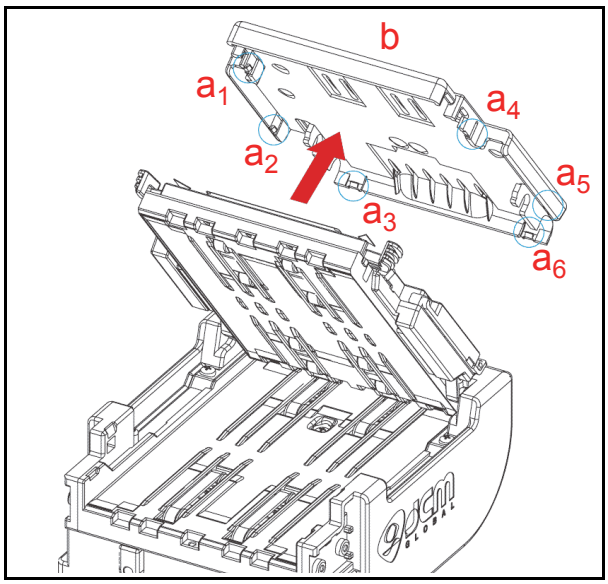

Figure 4-24 Upper Cover Removal

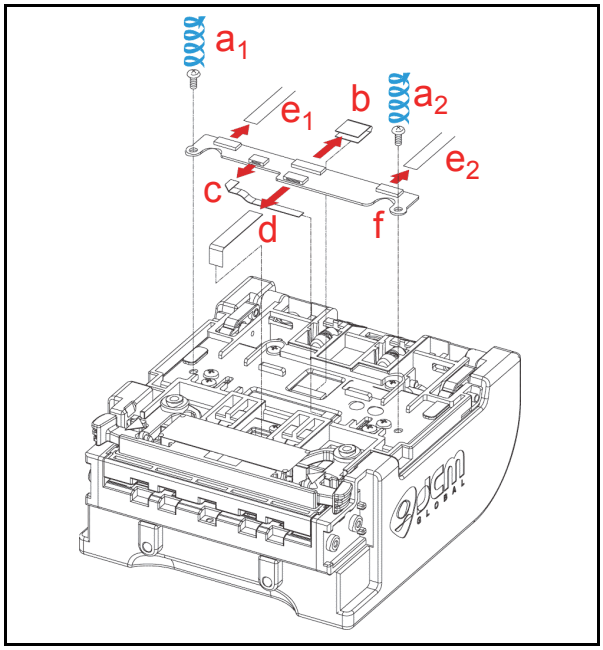

Figure 4-25 Sensor Transfer Board Assembly, CIS FFC, Transmissive Light & Upper UV FPC Cable Removal

Validation Sensor Board Assembly Removal

To remove the Validation Sensor Board Assembly, proceed as following:

1. Remove the four (4) Cover Mounting Screws (See Figure 4-26 a_1 through a_4) located on the base side of the Validation Unit, and remove the iVIZION® Head Cover "A" (See Figure 4-26 b) off the Validation Assembly.
2. Remove the two (2) mounting Screws (See Figure 4-27 a_1 & a_2) and take Grounding Plate "A" (See Figure 4-27 b) off the Validation Unit.
3. Remove the two (2) screws (See Figure 4-27 c_1 & c_2) retaining the Validation Sensor Assembly Board.
4. Unplug the two (2) FPC Cables (See Figure 4-27 d_1 & d_2) and the two (2) FFC Cables (See Figure 4-27 e_1 & e_2) from the Validation Sensor Assembly Board.
5. Take the Validation Sensor Board Assembly (See Figure 4-27 f) off the Validation Unit.

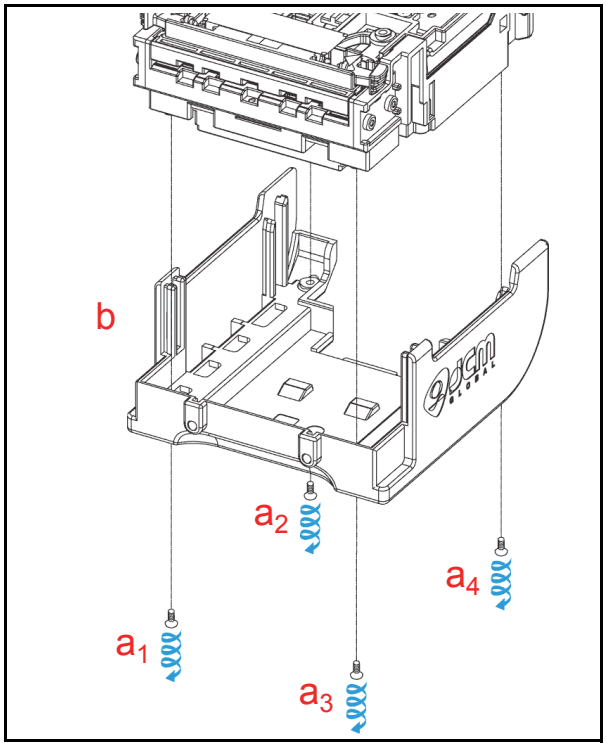

Figure 4-26 iVIZION Head Cover A Removal

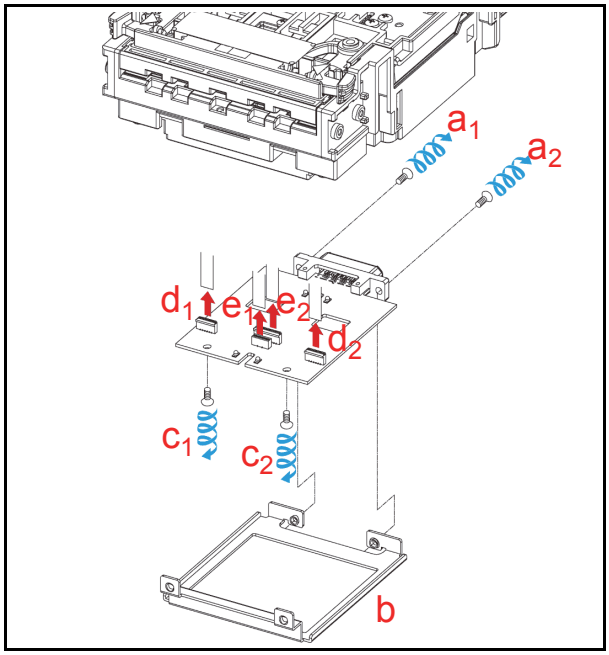

Figure 4-27 Validation Sensor Board Assembly Removal

Validation Sensor FPC Cable Removals

To remove the Validation Sensor FPC Cables, proceed as follows:

1. Remove the two (2) Validation Sensor FPC Cables (See Figure 4-28 a_1 & a_2) from the Validation Unit.

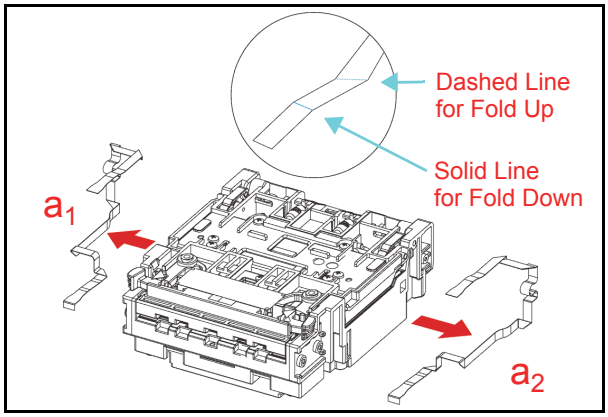

Figure 4-28 Validation Sensor FPC Removal

NOTE: Carefully observe the Up and Down Fold Line indications shown by the two (2) Cyan Arrows in Figure 4-28, and DONOT rebend them in an opposite direction!

NOTE: When installing new FPCs, fold-up along the Solid Lines and fold-down along the Dashed Lines before setting them in place. Once an FPC is folded, DONOT refold it back again or in the opposite direction once folded!

NOTE: When the Unit is reassembled, the FPCs should be reinstalled as illustrated by the Blue paths shown in Figure 4-29.

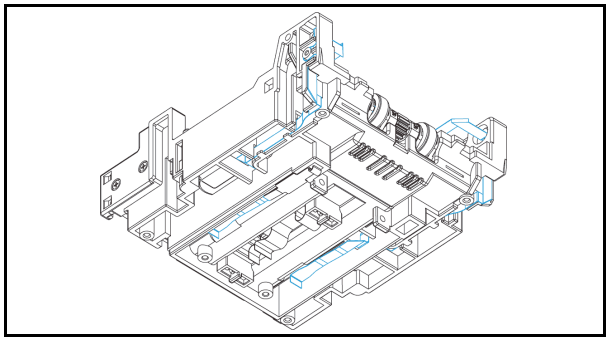

Figure 4-29 Validation Sensor FPC Reassembly

CIS/Transmissive Light & Upper UV Sensor Removals

To remove the CIS, the Transmissive Light and the Upper UV Sensors proceed as follows:

1. Push out the two (2) Alignment Pins (See Figure 4-30 a_1 & a_2) retaining the two (2) Limit Stops (See Figure 4-30 b_1 & b_2) inside the Unit, and individually remove the two (2) Stops from the Validation Unit.

NOTE: When reassembling the Unit, ensure that the right and left side Pins are correctly repositioned when reset into place.

2. Carefully spread both side of iVIZION® Head FR "A" Frame apart (See Figure 4-30 c_1 & c_2), and lift the Upper Validation Section (See Figure 4-30 d) up and out of the Validation Unit.

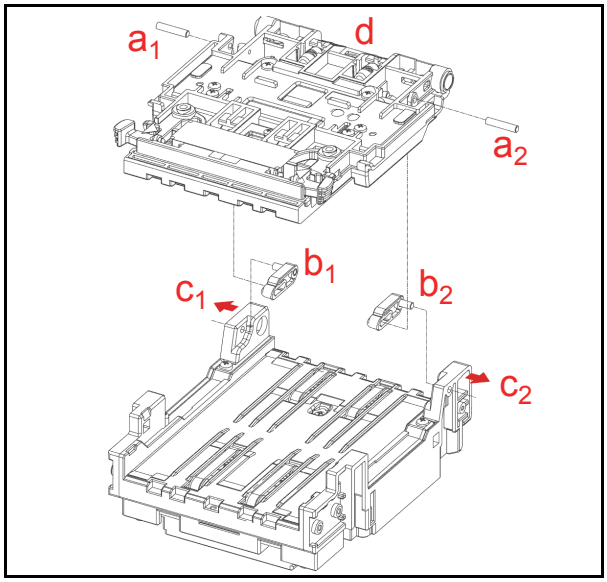

Figure 4-30 Upper Validation Part Removal

3. Remove the six (6) mounting Screws (See Figure 4-31 a_1 through a_6) retaining the upper iVIZION® BG 85B Head Assembly (See Figure 4-31 b) to the lower Validation Unit.

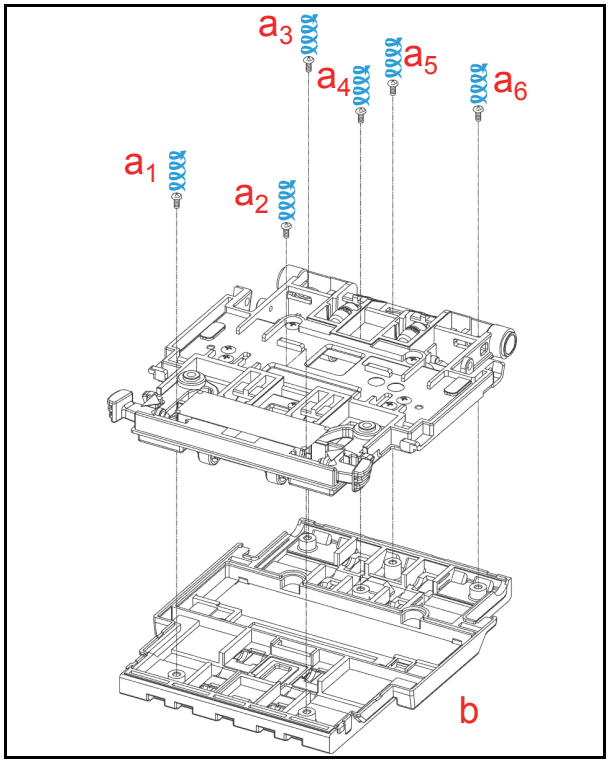

Figure 4-31 iVIZION Head BG85B Removal

4. Remove the four (4) CIS Sensor Mounting Screws (See Figure 4-32 a_1 through a_4) and remove the CIS Sensor (See Figure 4-32 b) from the Upper Validation Section.

NOTE: When reassembling the Unit, ensure that the UV Sensors are correctly re- positioned when set in place (See "Reassembly Cautions" on page 4-10 of this Section).

NOTE: If foreign objects are observed adhering to the Sensor's surface, blow it clean by using a Compressing Air spray.

5. Remove the two (2) mounting Screws (See Figure 4-32 c_1 & c_2) retaining the Transmissive Light Sensor in place (See Figure 4-32 d), and remove it from the Upper Validation Section.
6. Remove the two (2) mounting Screws (See Figure 4-32 e_1 & e_2) retaining the Upper UV Sensor in place (See Figure 4-32 f), and drop it down and off the Upper Validation Section.

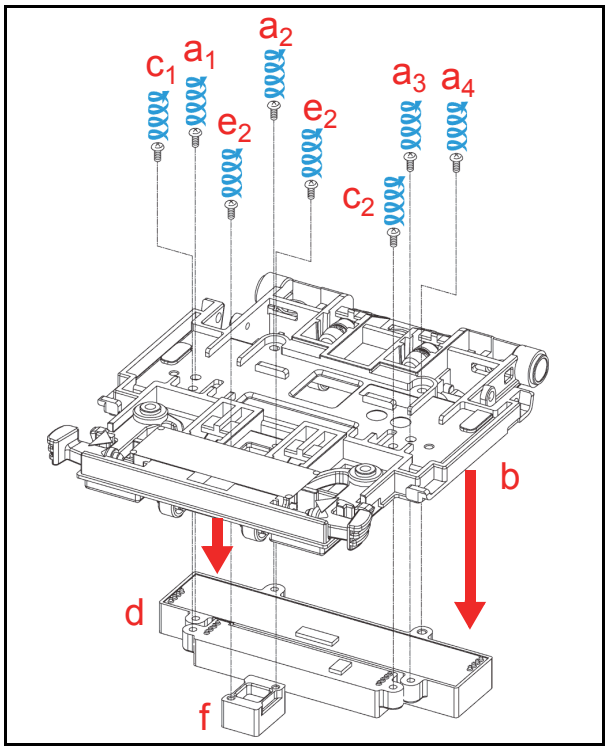

Figure 4-32 CIS, Transmissive Light & Upper UV Sensor Removal

CIS/CIS FPC/Lower UV Sensor & Lower UV FFC Removal

To remove the CIS, the CIS FPC, the Lower UV Sensor and the Lower UV FFC proceed as follows:

1. Remove three (3) BG 85A Head Mounting Screws (See Figure 4-33 a_1, a_2 & a_3) and release the four (4) Clip-tab Stops (See Figure 4-33 b_1 through b_4) on the iVIZION® BG 85A Head.
2. Remove the iVIZION® BG 85A Head (See Figure 4-33 c) up and off of the Validation Unit.

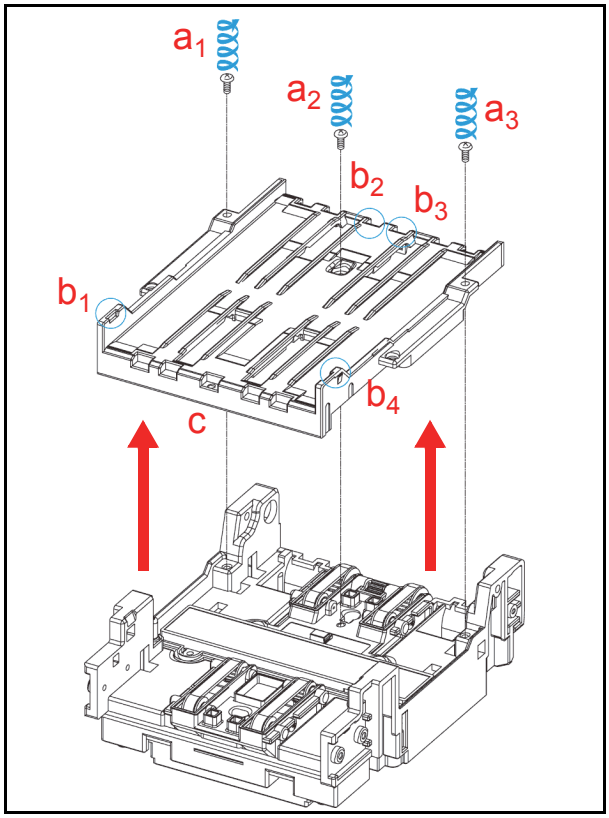

Figure 4-33 iVIZION BG 85A HEAD Removal

3. Remove two (2) mounting screws (See Figure 4-34 a_1 & a_2) retaining the Lower Validation Section in place (See Figure 4-34 b) and remove it up and off the Validation Unit.

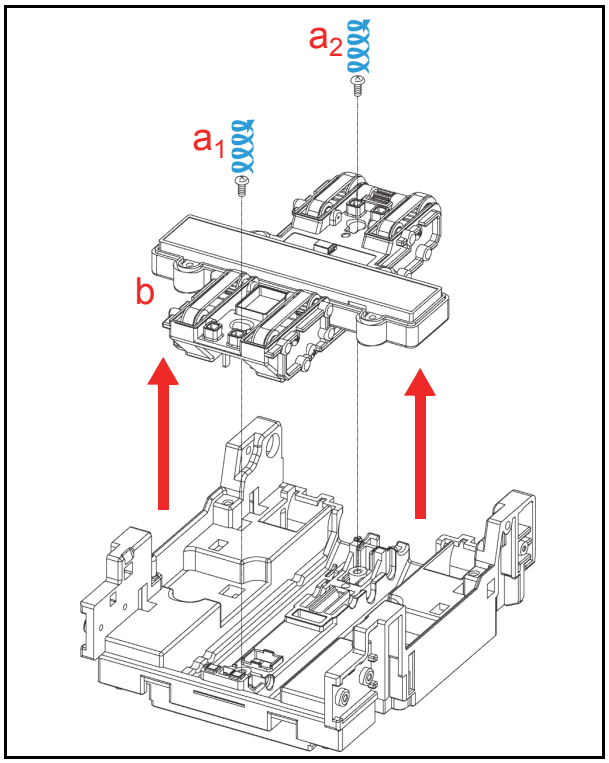

Figure 4-34 Lower Validation Part Removal

4. Remove the four (4) CIS Sensor Mounting Screws (See Figure 4-35 a_1 through a_4), and remove the CIS Sensor (See Figure 4-35 b) and the CIS FPC Cable (See Figure 4-35 c) off of the Lower Validation Section.

NOTE: If foreign objects are observed adhering to the CIS surface, blow it clean by using a Compressed Air spray.

5. Remove two (2) mounting screws (See Figure 4-35 d_1 & d_2), retaining the Lower UV Sensor in place (See Figure 4-35 e) and remove it and the Lower UV FFC Cable (See Figure 4-35 f) from the Lower Validation Section.

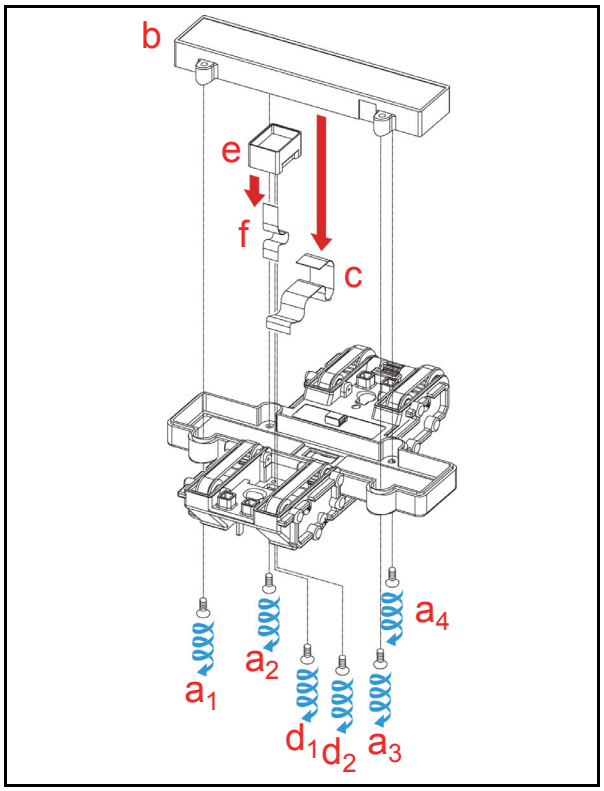

Figure 4-35 CIS, CIS FPC, Lower UV Sensor & Lower UV FFC Removal

NOTE: When reassembling the Unit, ensure that the UV Sensors are correctly re-positioned and set in place as illustrated in Figure 4-38 on this page.

Validation Unit Timing Belt Removal

To remove Timing Belt proceed as follows:

1. Remove the three (3) Side Plate Cover Mounting Screws (See Figure 4-36 a_1, a_2 & a_3) located on right side of the Lower Validation Section.
2. Remove the Cover (See Figure 4-36 b) from the Lower Validation Section.
3. Remove Timing Belt (See Figure 4-36 c) from the Lower Validation Section.

NOTE: Follow the same procedure to remove the opposite side Timing Belt.

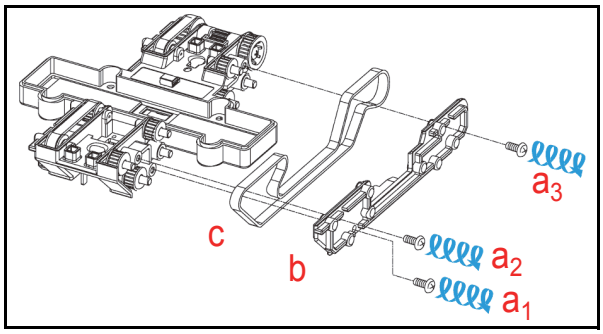

Figure 4-36 Timing Belt Removal

NOTE: The Timing Belt should be reinstalled as illustrated by the Blue path shown in Figure 4-37 when the Unit is being reassembled.

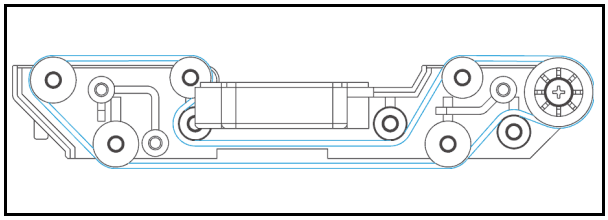

Figure 4-37 Timing Belt Replacement

Reassembly Cautions

When reassembling the Upper/Lower UV Sensors, make sure that both of the Sensor positions and directions are correctly placed. Match the Connector's position as illustrated in Figure 4-38a.

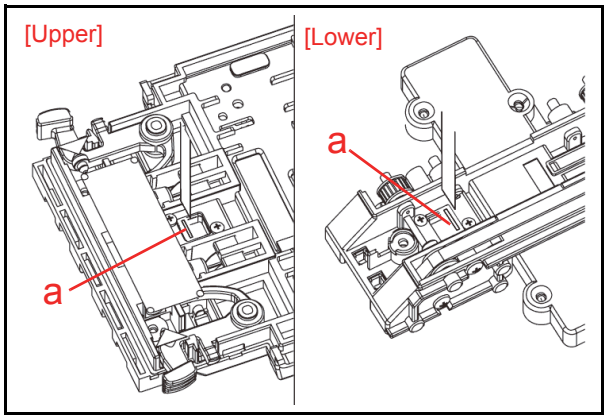

Figure 4-38 Upper/Lower UV Sensors Location

NOTE: Ensure that all Sensors and the iVIZION® BG 85B Head surfaces are absolutely clean before reassembling the iVIZION® Unit. Also ensure that all Finger Prints, smudges, dirt or film that exists on any surfaces in the Transport path are removed.

Disassembly and Reassembly of the iVIZION® Unit is now complete.

iVIZION® Series

Next-Generation Banknote Acceptor Unit

Section 5

5 WIRING DIAGRAMS

This chapter provides the iVIZION® Next-Generation Banknote Acceptor Unit Wiring Diagrams for the following items:

- System Wiring Diagram.

iVIZION System Wiring Diagram

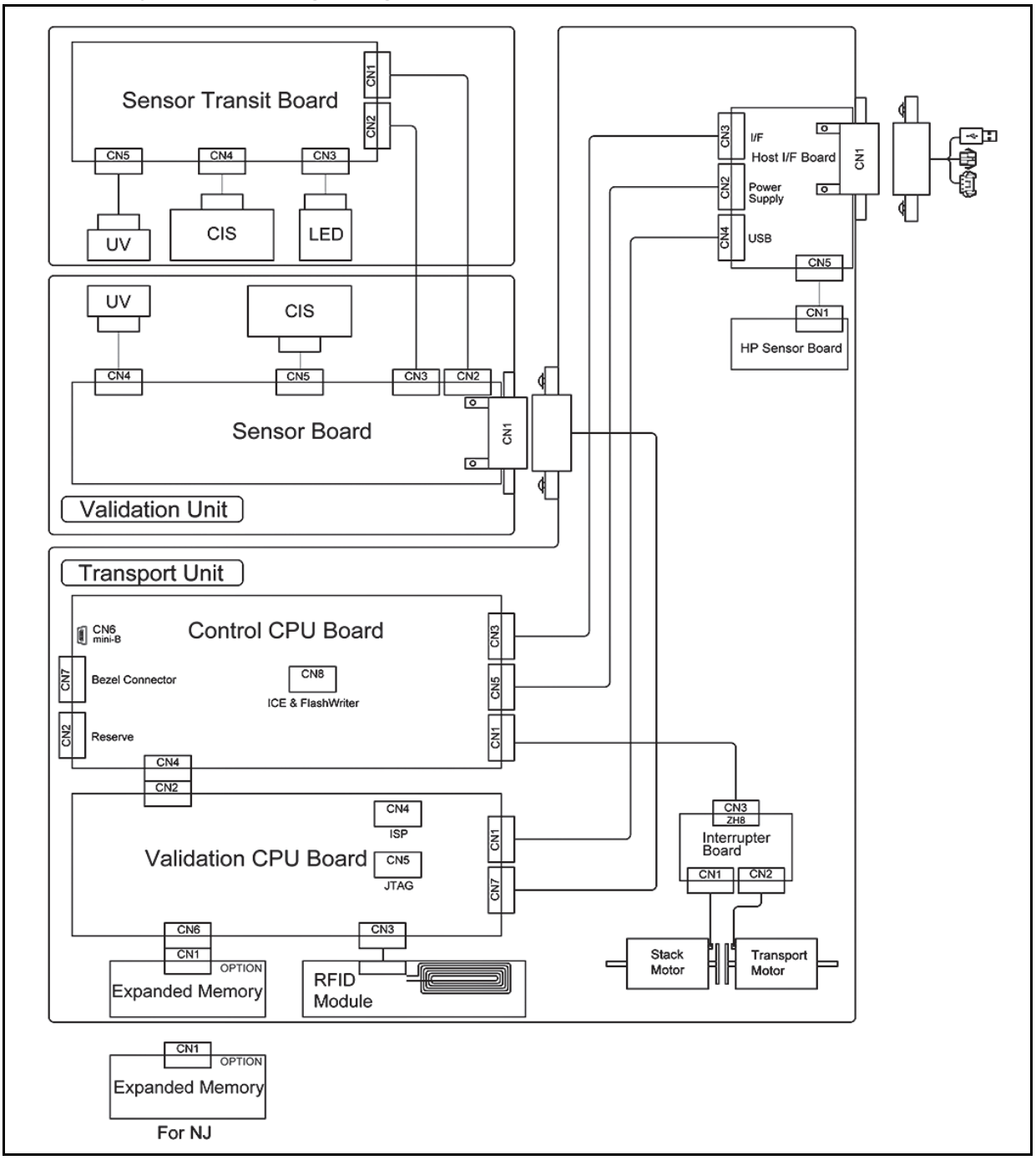

Figure 5-1 iVIZION System Wiring Diagram

THIS PAGE INTENTIONALLY LEFT BLANK

iVIZION® Series
Next-Generation Banknote Acceptor Unit
Section 6

6 CALIBRATION AND TESTING

This section provides Calibration and Performance Testing instructions for the iVIZION® Next-Generation Banknote Acceptor Unit and contains the following information:

- Download and Installation Workbench Tool Requirements
- Application Software Installation Procedure
- Driver Installation Procedure
- JCM Tool Suite Standard Edition Mode
- Software Download Tool Requirement
- Software Downloading Procedure
- When to Calibrate
- Reference Paper Placement
- Calibration Tool Requirements
- Calibration Preparation
- Calibration Procedures
- Performance Tests with a PC
- Performance Test Tool Requirement
- Performance Test Preparation
- Performance Tests with the External Switch
- Utility Function.

Download and Installation Workbench Tool Requirements

Figure 6-1 illustrates and list identifies the tools and equipment interconnects necessary to download and install the iVIZION® Device.

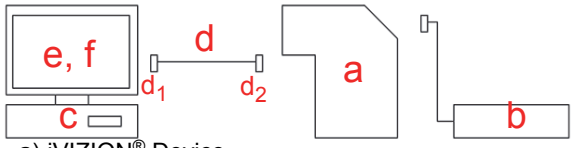

a) iVIZION® Device
b) Power Supply
c) PC (OS: Windows XP)
d) USB Cable
d_1) USB "A" Terminal Plug
d_2) USB Mini "B" Terminal Plug
e) iVIZION® USB Driver (usbivizion.inf)
f) Application Software*
(JCM Tool Suite Standard Edition).

*. Containing USB Downloader, Sensor Calibration, Performance Test programs and Utility Function.

Figure 6-1 Tool and Harness Connections

a) PC Side (USB A Terminal)
b) iVIZION Side (USB Mini-B Terminal)

Figure 6-2 USB Cable Type Requirement

Application Software Installation

Perform the following steps to install the "JCM Tool Suite Standard Edition" Application Software (Refer to Figure 6-1 and Figure 6-2 for the necessary Tool and Harness Connections and USB Cable Type Requirements respectively).

1. Copy the "JCMToolSuiteStandardEdition.zip" Application Software and extract on the Desktop.
2. Open the Third Layer of the extracted Folder and Double-click on "Setup.exe"(See Figure 6-3 a).

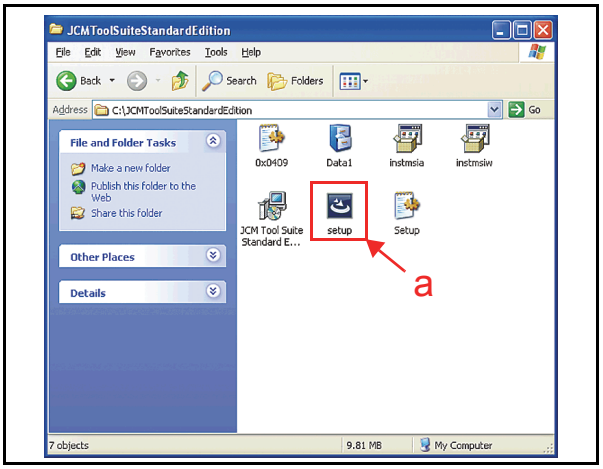

Figure 6-3 Setup.exe File Location

The "JCM Tool Suite Standard Edition - Install Shield Wizard" Screen shown in Figure 6-4 will appear.

3. Mouse-click on "Next>" Screen Button (Figure 6-4 a).

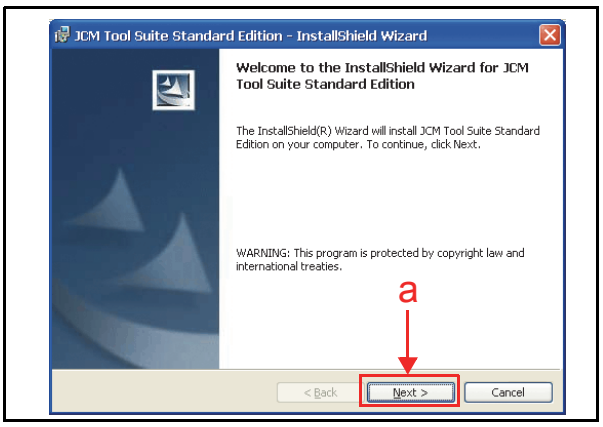

Figure 6-4 Install Shield Wizard Screen

4. When the "Custom Information Screen" shown in Figure 6-5 appears, Mouse-click on the Radio Screen Button located next to the "Anyone who use this computer" (See Figure 6-5 a) and Mouse-click on "Next>" Screen Button.

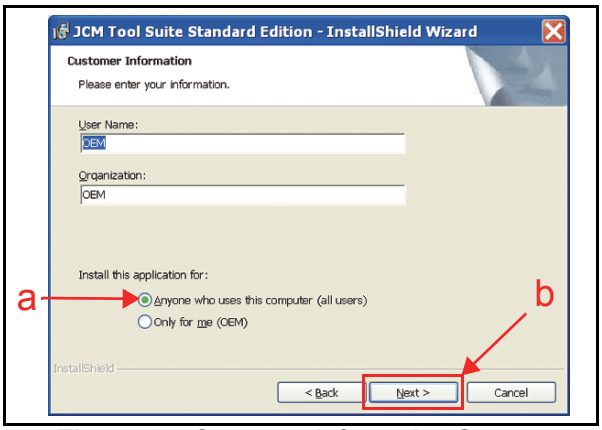

Figure 6-5 Customer Information Screen

NOTE: The "OEM" in "Last Name:" and "Organization:" fields are default settings. The actual "Last Name" and "Organization Name" is available for a Customer's use.

5. Mouse-click on "Next>" Screen Button (See Figure 6-6 a) when the "Destination Folder" Screen shown in Figure 6-6 appears.

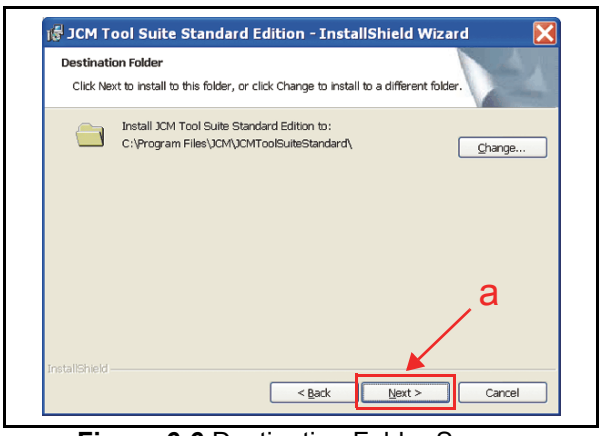

Figure 6-6 Destination Folder Screen

6. Check the "Current Settings:" area (See Figure 6-7 a) and then Mouse-click on the "Install" Screen Button (See Figure 6-7 b) to start the installation.

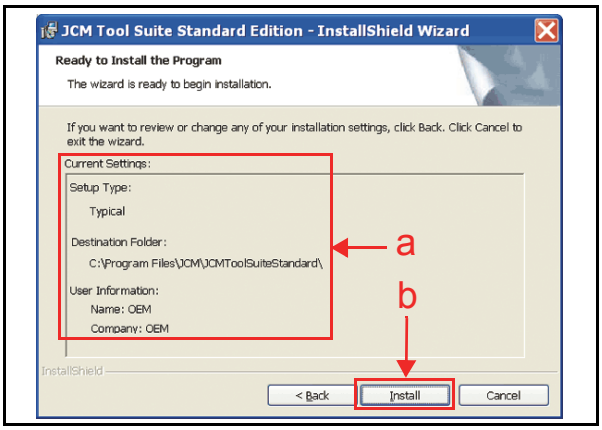

Figure 6-7 Current Settings Confirmation

7. Once installation is complete, the "InstallShield Wizard Completed" Screen shown in Figure 6-8 will appear.

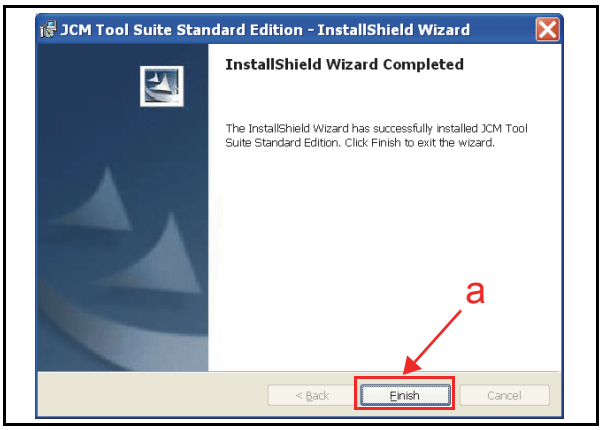

Figure 6-8 Installation Completion Screen

8. Mouse-click on the "Finish" Screen Button to end the installation process.

This completes the "JCM Tool Suite Standard Edition" installation procedure.

Driver Installation Procedure

Perform the following steps to install the various iVIZION® Software Drivers (Refer to Figure 6-1 for the Tool Requirements and Harness Connector locations). Before downloading the iVIZION® USB Driver the "usbivizion.inf" application must be installed in a designated Folder on the PC first. allows:

1. Connect the USB Cable to the iVIZION® Unit.
2. Supply power to the iVIZION® Unit.
3. The "Hardware Update Wizard" Screen shown in Figure 6-10 will appear. Mouse-click on the Radio Screen Button located beside "No, not this time" (See Figure 6-9 a) and then Mouse-click on the "Next>" Screen Button (See Figure 6-9 b).

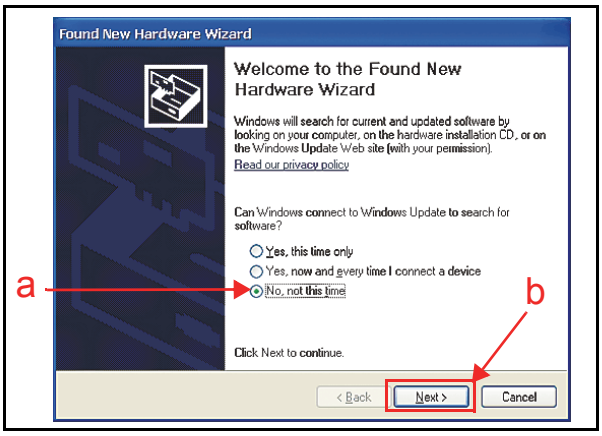

Figure 6-9 Hardware Update Wizard Screen 1

4. When the Screen shown in Figure 6-10 appears, Mouse-click on the Radio Screen Button located beside "Install the software automatically (Recommended)" line (See Figure 6-10 a), and then Mouse-click on the "Next>" Screen Button (See Figure 6-10 b).

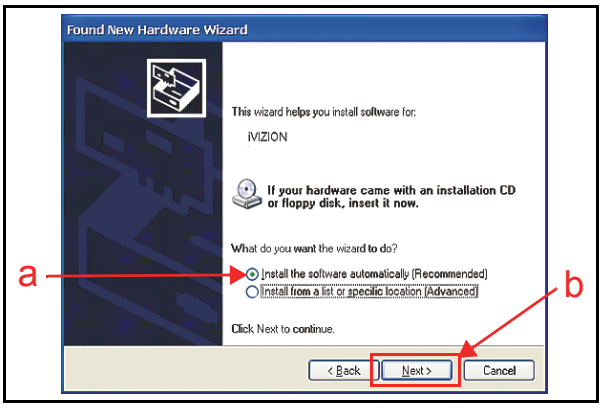

Figure 6-10 Hardware Update Wizard Screen 2

5. The USB Driver locating process will begin. If the Hardware Installation Warning shown in Figure 6-11 appears, Mouse-click on the "Continue Anyway" Screen Button (See Figure 6-11 a).

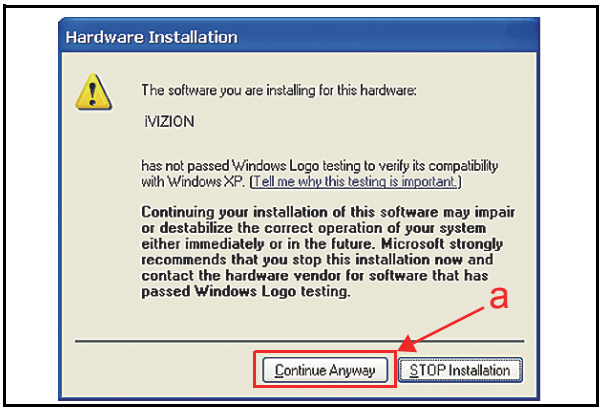

Figure 6-11 Hardware Update Wizard Screen 3

6. The (usbivizion.inf) USB Driver installation process will now begin.
7. When Software installation is complete, the "Completing the Found New Hardware Wizard" Screen will appear as shown in Figure 6-12.

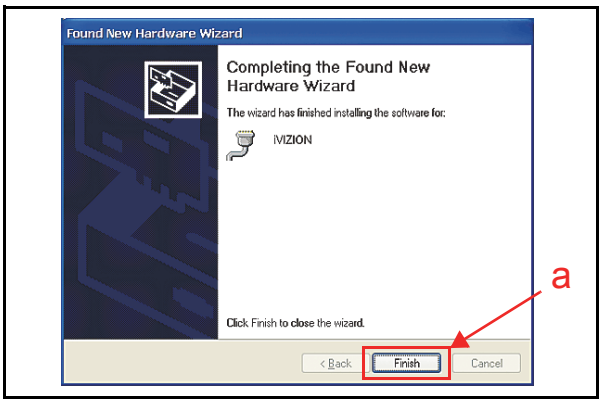

Figure 6-12 Hardware Update Wizard Screen 4

8. Mouse-click on the "Finish" Screen Button to close the "Completing…" Screen (See Figure 6-12 a).
9. Turn the iVIZION® power switch OFF.

This complete the iVIZION® USB Driver Software installation procedure.

JCM Tool Suite Standard Edition Mode

The following two (2) mode feature types exist in the "JCM Tool Suite Standard Edition" package:

- Normal Mode
- Test Mode.

"**Normal Mode**" is a mode designed to provide the iVIZION® Operating Software to be downloaded. The "**Service Mode**" contains three (3) available choices in its Pull-down Menu shown in Figure 6-13 as follows:

- **Download** (for downloading software)
- **Statistics** (for observing log data)
- **Utility** (for setting ICB and CIS Image functions).

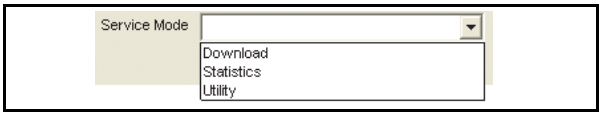

Figure 6-13 Normal Mode Selection

"**Test Mode**" is a mode designed to perform iVIZION® Calibration and Performance Testing. The "**Service Mode**" contains five (5) available choices in its Pull-down Menu shown Figure 6-14 as follows:

- **Download** (for downloading software)
- **Statistics** (for observing log data)
- **Sensor Adjustment** (for calibration)
- **Performance Test** (for performance testing)
- **Utility** (for setting ICB and CIS Image functions).

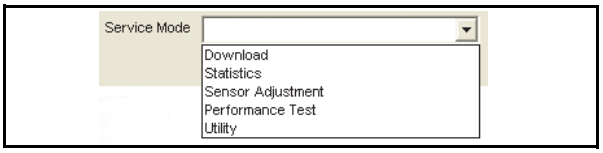

Figure 6-14 Test Mode Selection

Software Download Tool Requirements

The tools listed in Figure 6-15 are required to install the iVIZION® Operating Software.

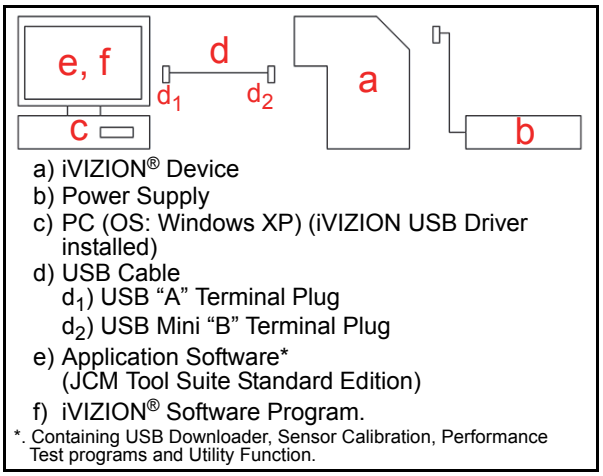

Figure 6-15 Required Software Download Tools

Software Download Procedures

The following two (2) types of download procedures exist, depending on the iVIZION® operating conditions:

- The iVIZION® contains the "iVIZION® Software Program already installed" (Upgrading)
- The iVIZION® is new and does not have the "iVIZION® Software Program installed" (e.g., New CPU Board).

Download the Upgrade Program

To download the latest "iVIZION® Software Program" into a new iVIZION®, proceed as follows:

1. Turn the iVIZION® Power Switch to **OFF**.
2. Set all of the 8-Position DIP Switches to **OFF** (See Figure 6-16).

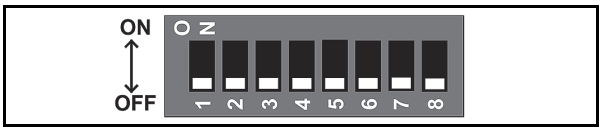

Figure 6-16 DIP Switches All OFF

3. Connect the USB Port located on the front side of the iVIZION® Unit to the PC using a USB "A" to "mini-B" Communications Cable.
4. Turn the iVIZION® Power Switch to **ON**.
5. Launch the "**JCM Tool Suite Standard Edition**" Application. The Screen shown in Figure 6-17 will appear when the application becomes activate.

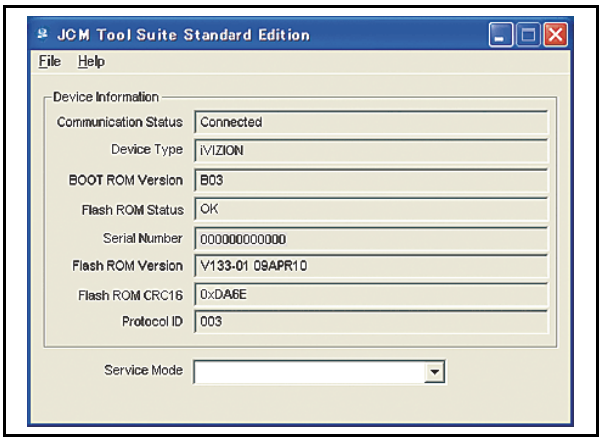

Figure 6-17 JCM Tool Suite Standard Edition Scree

6. Mouse-click on, and hold-down the "Service Mode" Pull Down Menu and re-select "Download" from within the Pull-Down Menu Selections. When re-selected it will highlight the selected Field Blue (See Figure 6-18), the Status LED will flash at a Green Color rate.
   Once activated, "Download" will occur, the "JCM Downloader Suite Edition Version X.XX" will automatically begin functioning, and the Screen shown in Figure 6-19 will appear.
7. Mouse-click on the "Browse" Screen Button (See Figure 6-19 a).

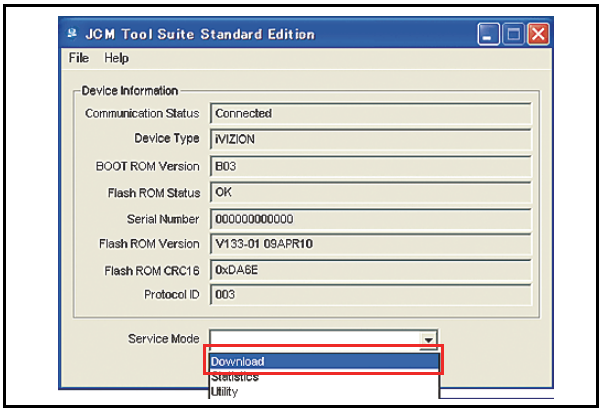

Figure 6-18 JCM Tool Suite Standard Edition Screen Pull-Down Menu

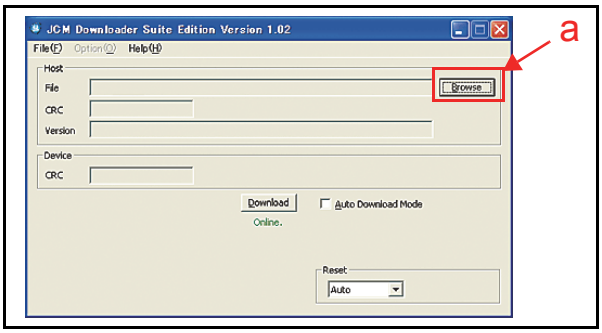

Figure 6-19 Browse Screen Button Location

8. Select the Current iVIZION® Software Program Version (e.g., the "iVIZION®100(USA)ID003 V13901" example shown in Figure 6-20a) from the **Download File** Screen that appears.
9. Mouse-click on the "Open" Screen Button (See Figure 6-20 b).

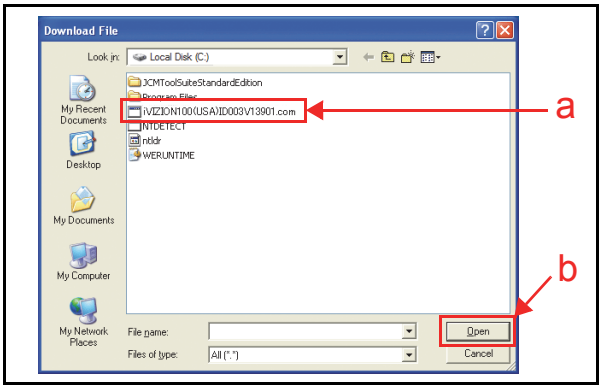

Figure 6-20 iVIZION Software Program Selection

10. When the "**JCM Downloader Suite**" Screen reappears, Mouse-click on the center "Download" Screen Button (See Figure 6-21 a) to begin the Software download into the iVIZION® Unit. The Download Screen will display a Progress Barograph during the download operation (See Figure 6-21 b), and a Blue Text Line below the Download Screen Button will display the download Percentage as "Downloading : XX%" (See Figure 6-21 c). The Status LED will alternately light Green and Red during this operation.

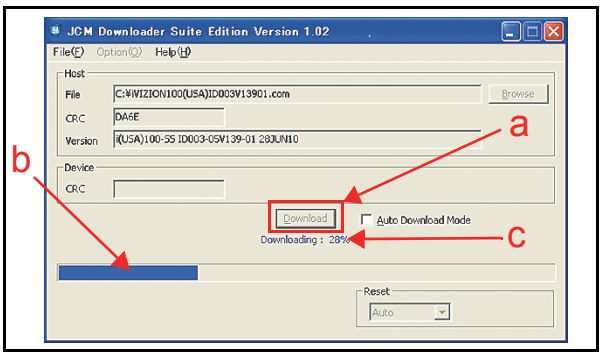

Figure 6-21 Download Progress Screen 1

11. When the download is complete, the "Download Success. Reset Done. Waiting for USB Cable Disconnection." Blue Text Line will appear (See Figure 6-22 a).
12. Confirm that the Host's Checksum and the Device Checksum's identically match each other (See Figure 6-22 b).

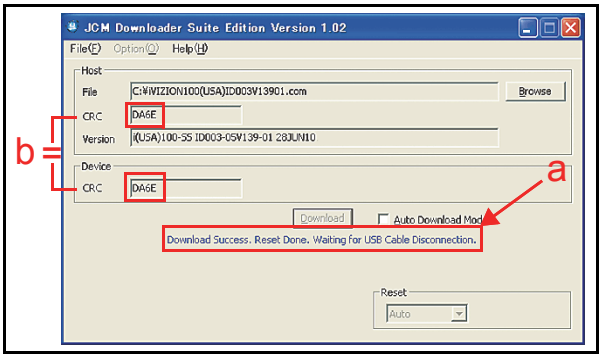

Figure 6-22 Download Completed Screen 1

Downloading the Program First Time

When the iVIZION® Software Program is not pre-installed (e.g., when changing the CPU Board), the download procedure for an "empty" Unit is slightly different from the Download and Upgrade Program procedures that later follow.

To download the "iVIZION® Software Program" into an "empty" iVIZION® for the first time, proceed as follows:

1. Turn the iVIZION® Power Switch to **OFF**.
2. Set 8-Position DIP Switch #6, #7 and #8 to **ON** (See Figure 6-23).

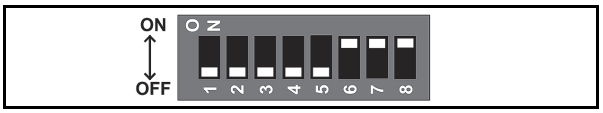

Figure 6-23 DIP Switches 6, 7, & 8 ON

3. Connect the USB Port located on the front side of the iVIZION® Unit to the PC using the "A"/ "mini-B" USB Communications Cable.
4. Turn the iVIZION® Power Switch to **ON**. The Status LED will flash at a Green Color rate.
5. Launch the "JCM Tool Suite Standard Edition" Application. The Screen shown in Figure 6-24 will appear when the application is activate.

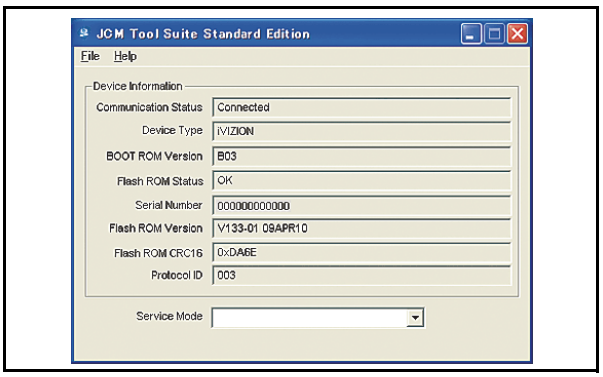

Figure 6-24 JCM Tool Suite Standard Edition Screen 2

6. Mouse-click on, and hold-down the "Service Mode" Pull-down Menu selection and Slide-down the Menu to re-select "Download" from within the Menu Selections. When selected it with Highlight the selected Field Area Blue (See Figure 6-25), and the Status LED will flash at a Green Color rate.

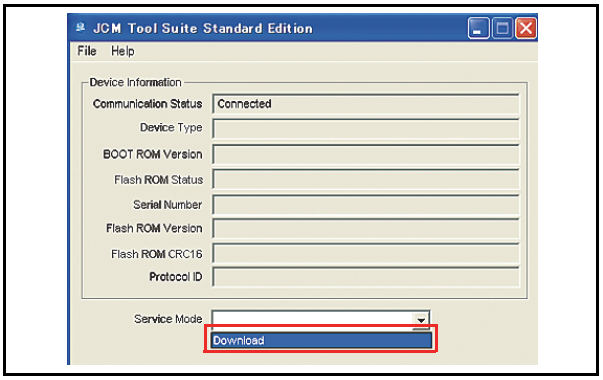

Figure 6-25 JCM Tool Suite Standard Edition Screen Pull-Down Menu 2

Once "Download" is activated, the "**JCM Downloader Suite Edition Version X.XX**" will automatically begin functioning, and the Screen shown in Figure 6-26 will appear.

7. Mouse-click on the "Browse" Screen Button (Figure 6-26 a).

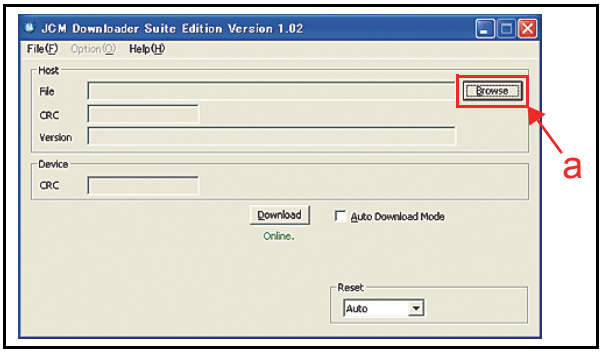

Figure 6-26 Browse Screen Button Location

8. Select the current iVIZION® Software Program version (e.g., iVIZION100(USA)ID003V13901 in the Figure 6-27a example) from the **Download File** Screen that appears, then Mouse-click on the "Open" Screen Button (See Figure 6-27 b).

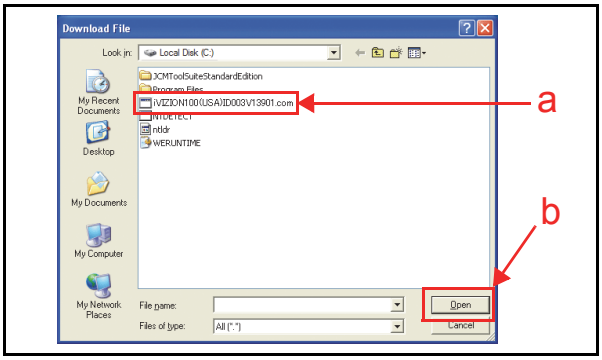

Figure 6-27 iVIZION Software Program Selection

9. When the "JCM Downloader Suite…" Screen re-appears, Mouse-click on the center "Download" Screen Button (See Figure 6-28 a) to begin the Software download into the iVIZION® Unit. The Download Screen will display a Progress Barograph during the download operation (See Figure 6-28 b), and a Blue Text Line below the Download Screen Button will display the download Percentage as "Downloading : XX%" (See Figure 6-28 c). The Status LED will alternately light Green and Red.

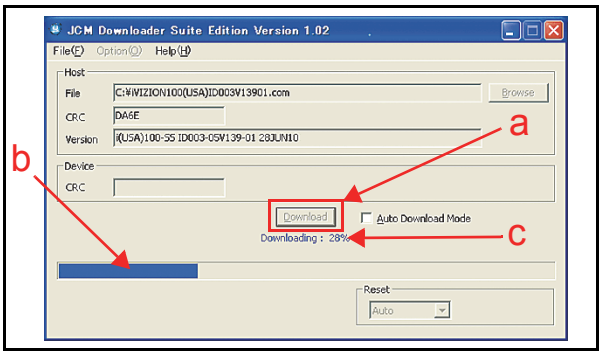

Figure 6-28 Download Progress Screen 2

10. When the download is complete, the "Download Success. Reset Done. Waiting for USB Cable Disconnection." Blue Text Line will appear (See Figure 6-29 a).
11. Confirm that the Host's Checksum and the Device Checksums identically match each other (See Figure 6-29 b).

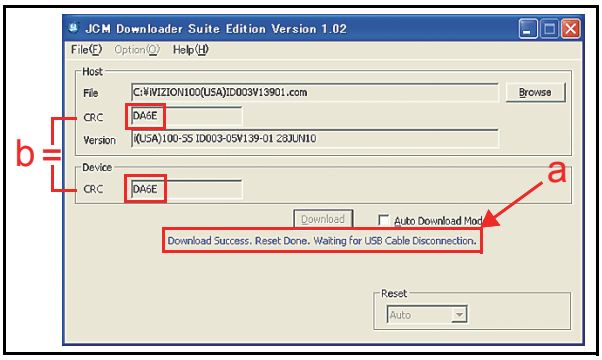

Figure 6-29 Download Completed Screen 2

This completes the iVIZION Software Downloading Procedures.

Calibration

This section provides instructions for performing a calibration of the Acceptor Unit Sensors and the Transport Unit Sensors within the iVIZION® Device.

When to Calibrate

Calibration should be performed when one of the following four (4) conditions occur:

1. When removing one of the Circuit Boards.
2. When replacing one of the Circuit Boards.
3. When dirt adheres to the Sensors (See "Sensor Cleaning Procedure" on page 2-9 of this Section).
4. When the Banknote Acceptance Rate becomes drastically degraded.

Calibration Order

Table 6-1 lists the Calibration Order related to each iVIZION® Sensor's Screen indication.

Table 6-1 iVIZION Sensor Calibration Order

Step	Screen Indication	Related Sensor
Calibration #1	Box RUNNING	Cash Box Sensor
	Nearly Full RUNNING	Nearly Full Sensor
	Feed-Out RUNNING	Feed-Out Sensor
Calibration #2	Home Position RUNNING	Home Position Sensor
	Feed-In RUNNING	Feed-In Sensor
	Entrance RUNNING	Entrance Sensor
	Exit RUNNING	Exit Sensor
Calibration #3	UV RUNNING	UV Sensor (Upper)
	UV RUNNING	UV Sensor (Lower)
Calibration #4	CIS RUNNING	CIS transmissive Sensor
		CIS Sensor (Lower)
		CIS Sensor (Upper)

Calibration Tool Requirements

Figure 6-30 illustrates and list identifies the calibration Tools and equipment interconnects necessary to install an iVIZION® Unit away from its Host Machine.

NOTE: When the "USB "A" Terminal" connects to the USB Hub, the iVIZION may not be operating. Ensure that the "USB "A" Terminal" is properly connected directly to the USB Port of the PC.

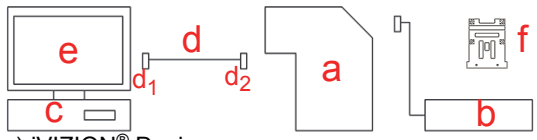

a) iVIZION® Device
b) Power Supply
c) PC (OS: Windows XP) (iVIZION USB Driver Installed)
d) USB Cable
   d_1) USB A Terminal
   d_2) USB Mini-B Terminal
e) Application Software*
   (JCM Tool Suite Standard Edition)
f) Reference Paper (KS-072)

*. Contains USB Downloader, Sensor Calibration Performance Test Programs and Utility.

Figure 6-30 Remote Calibration Tools Required

Placing the KS-072 Reference Paper

This portion provides information concerning the KS-072 Reference Paper's settings and uses.

NOTE: Do not touch the Paper Surfaces of either side of the KS-072 Reference Paper (See Figure 6-31 a).

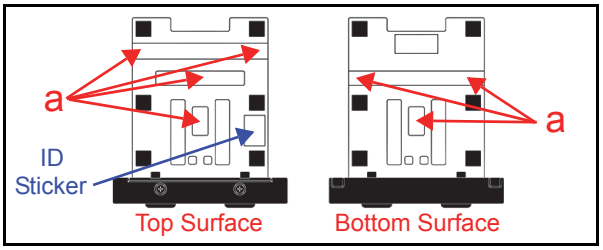

Figure 6-31 Reading KS-072 Reference Paper

Perform the following steps to properly place the KS-072 Calibration Reference Paper into the iVIZION® Device:

1. Open the Upper Guide while pressing in on the Upper Guide Access Levers located on each side of the Acceptor Unit that are indicated by the Blue Arrows in Figure 6-32a.
2. Place the KS-072 Reference Paper (See Figure 6-32 b) in the Unit until its Catch Edge reaches both the left and right side of the Frame (See Figure 6-32 c).

NOTE: Place the KS-072 Reference Paper so the ID Sticker is visible, otherwise, Calibration will not be correctly performed.

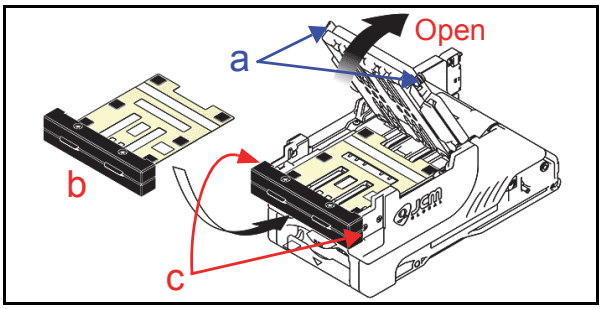

Figure 6-32 Reference Paper Setting 1

3. Firmly close the Upper Guide (See Figure 6-33 a) until it "clicks" into place, and ensure that both sides are tightly closed and locked in place.

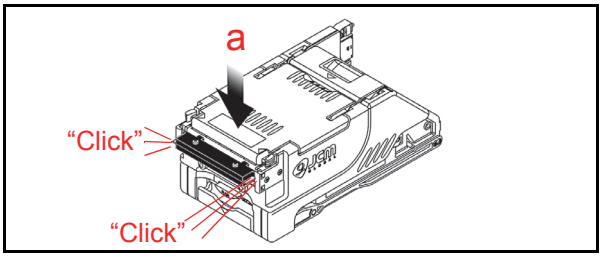

Figure 6-33 Reference Paper Setting 2

Calibration Procedure

The following two (2) methods exist for performing each of the iVIZION® Calibration Procedures:

- Calibration Only
- Calibration plus Serial Number Writing.

Calibration Only

Perform the following steps to just calibrate the iVIZION® Unit Sensors:

1. Turn the iVIZION® Unit's Power Switch **OFF**.
2. Set DIP Switch #8 to **ON** (See Figure 6-34).
3. Turn the iVIZION® Unit's Power Switch **ON**. The Status LED will begin flashing and then will light a steady Blue Color.

Figure 6-34 DIP Switch #8 ON

4. Launch the "JCM Tool Suite Standard Edition" Application. The "**JCM Tool Suite Standard Edition**" Screen shown in Figure 6-35 will appear when the application becomes active.
5. Mouse-click on, and hold-down the "Service Mode" Pull-down Menu Selection (See Figure 6-35 a) and slide-down to select the "Sensor Adjustment" from within the Pull-Down Menu (See Figure 6-35 b).

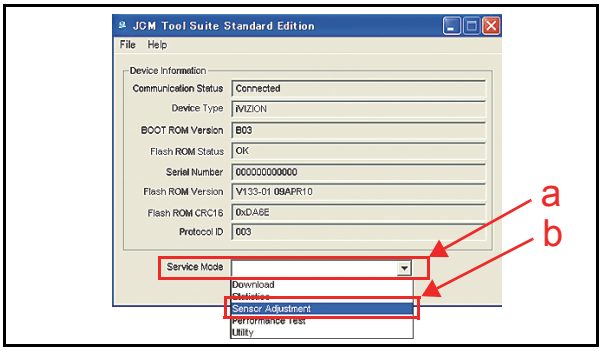

Figure 6-35 JCM Tool Suite Standard Edition Screen 3

6. This action will activate the "iVIZION Calibration Ver.X.XX" Mode automatically, and the Screen shown in Figure 6-36 will appear.

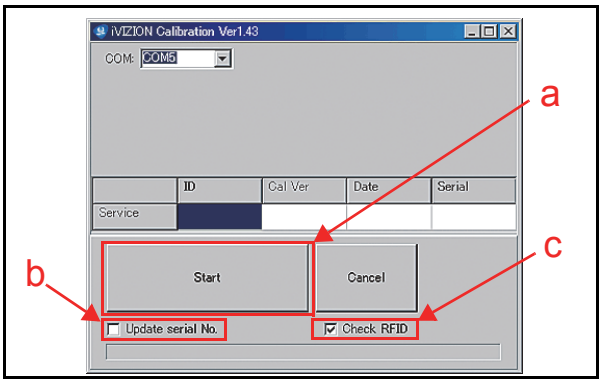

Figure 6-36 iVIZION Calibration Ver.X.XX Screen

*NOTE: Writing a Serial No. can be performed after a Calibration is completed. To do so, Click on the "*Update serial No.*" Check-box (See Figure 6-36 b) if the iVIZION Device needs its current Serial No. written.*

*NOTE: If the RFID Board is not featured within the iVIZION Device, remove the check in the "*Check RFID*" Check-box.*

7. Mouse-click on the "Start" Screen Button (See Figure 6-36 a) to begin the following three (3) sequential Sensors Calibration Procedures:

   a). Cash Box Sensor
   b). Nearly Full Sensor
   c). Feed-Out Sensor.

   Calibration will be performed in the above alphabetic order while one of either "**Box RUNNING**", "**Nearly Full RUNNING**" and "**Feed-Out RUNNING**" messages is showing on the Screen (See Figure 6-37).

*NOTE: If the "*Check RFID*" Check-box shown in Figure 6-37a is un-checked, the "***Calibration Information***" Screen shown in Figure 6-38 will not appear. When present, Mouse-Click on the "*OK*" Screen Button to begin the Calibration Procedure.*

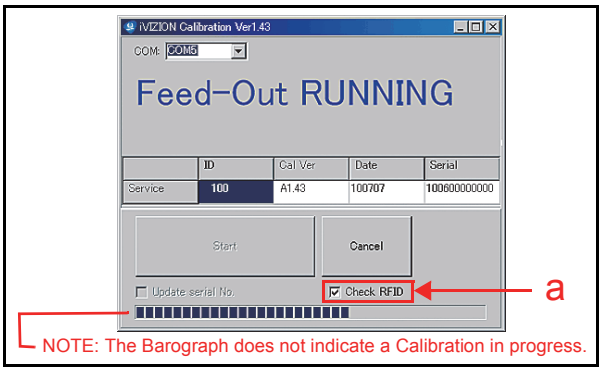

Figure 6-37 Feed-Out Calibration Proceeding Screen

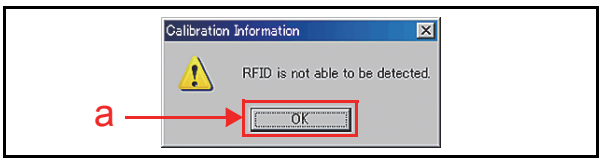

Figure 6-38 Calibration Information Screen 1

Once the three (3) Sensor Calibration Procedures are complete, the "**Calibration Information**" Screen shown in See Figure 6-39 will re-appear.

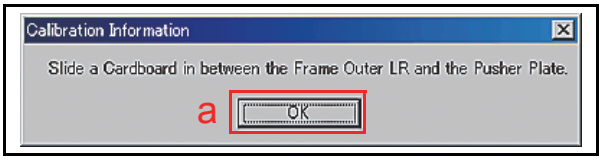

Figure 6-39 Calibration Information Screen 2

8. Remove the Cash Box to perform the Home Position Sensor Calibration Procedure.
9. Open the Cash Box and press down on the Pusher Release Plate (See Figure 6-40 a & b).

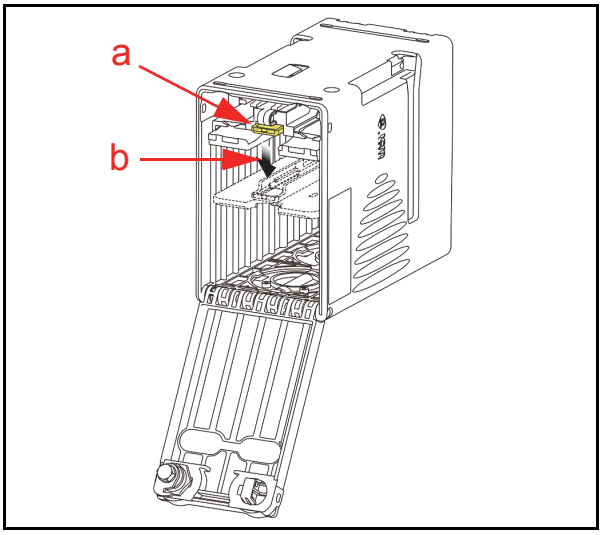

Figure 6-40 Pusher Plate Release Location

10. Hold the Pusher Plate down (See Figure 6-41 a) and slide a 80x50mm piece of Cardboard (See Figure 6-41 b) in between the Frame Outer LR Guides (Figure 6-41 c) and the Pusher Plate.

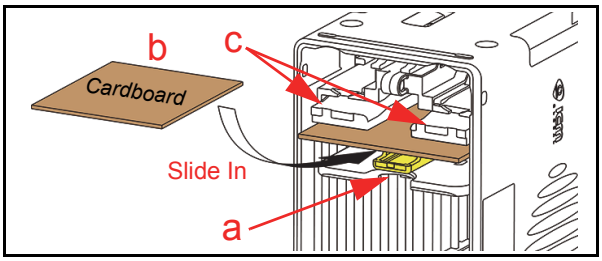

Figure 6-41 Cardboard Setting Location

11. Reseat the Cash Box back into its Frame position.
12. Mouse-click on the "OK" Screen Button (Review Figure 6-39 a) to begin the following four (4) Sensor Calibration Procedures:

    a). Home Position Sensor
    b). Feed-In Sensor
    c). Entrance Sensor
    d). Exit Sensor.

    Calibration will be performed in the above alphanumeric order while one of "**Home Position RUNNING**", "Feed-In **RUNNING**", "Entrance **RUNNING**" or "Exit **RUNNING**" messages is showing on the Screen (See Figure 6-42).

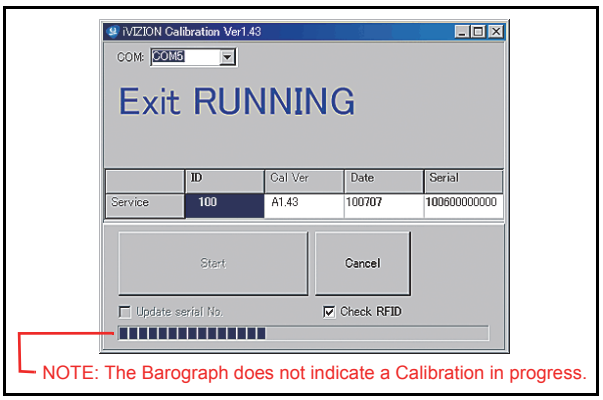

Figure 6-42 Exit Calibration Proceeding Screen

Once the four (4) Sensors Calibration Procedures are complete, the "**Calibration Information**" Screen shown in Figure 6-43 will re-appear.

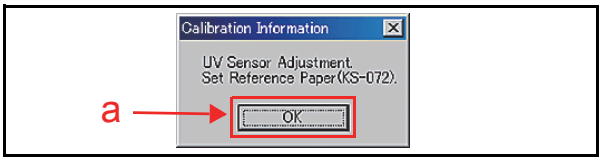

Figure 6-43 Calibration Information Screen 3

13. Remove the Cash Box and remove the piece of Calibration Cardboard, then reseat the Cash Box into the iVIZION® Device again.
14. Place Reference Paper KS-072 into the iVIZION® Device (See "Placing the KS-072 Reference Paper" on page 6-7 of this Section).
15. Mouse-click on the "OK" Screen Button (See Figure 6-43 a) to begin the following two (2) UV Sensor Calibration Procedures:
    a). Lower UV Sensor
    b). Upper UV Sensor.
    Calibration will be performed in the above alphabetic order while "UV **RUNNING**" is showing on the Screen (See Figure 6-44).

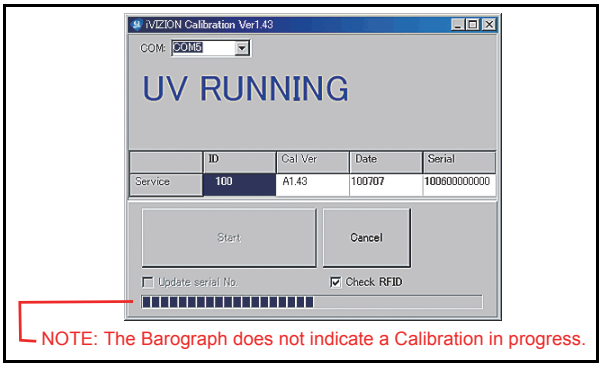

Figure 6-44 UV Calibration Proceeding Screen

Once the UV Sensor Calibration is complete, the "**Calibration Information**" Screen shown in Figure 6-45 will re-appear.

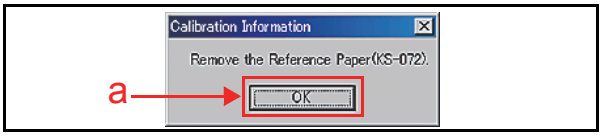

Figure 6-45 Calibration Information Screen 4

16. Remove the KS-072 Reference Paper and Mouse-click on the "OK" Screen Button (See Figure 6-45 a) to begin the UV Sensor Non-Paper Calibration.
    Once the UV Sensor Non-Paper Calibration is complete, the "**Calibration Information**" Screen shown in Figure 6-46 will re-appear.

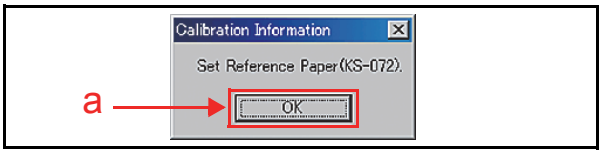

Figure 6-46 Calibration Information Screen 5

17. Place the KS-072 Reference Paper back into the iVIZION® Device (See "Placing the KS-072 Reference Paper" on page 6-7 of this Section).
18. Mouse-click on the "OK" Screen Button (See Figure 6-46 a) to begin the following three (3) CIS Sensor Calibration Procedures:
    a). CIS Transmissive Sensor
    b). CIS Upper Sensor
    c). CIS Lower Sensor.
    Calibration will be performed in the above alphabetic order while "CIS **RUNNING**" is showing on the Screen (See Figure 6-47).

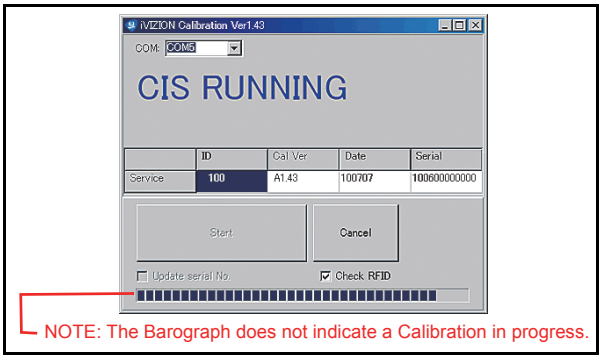

Figure 6-47 CIS Calibration Proceeding Screen

Once the CIS Sensor Calibration is complete, the "**Calibration Information**" Screen shown in Figure 6-48 will re-appear.

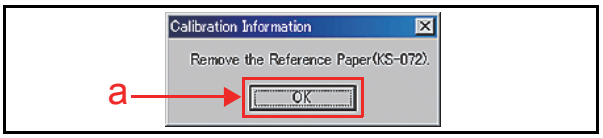

Figure 6-48 Calibration Information Screen 6

19. Remove the KS-072 Reference Paper and Mouse-click on the "OK" Screen Button (See Figure 6-48 a) to begin the CIS Sensor Non-Paper Calibration Procedure.
    Once the CIS Sensor Non-Paper Calibration Procedure is complete, the Calibration Value will be written to the EEPROMs located on the Sensor Board and the CPU Board (See Figure 6-49).

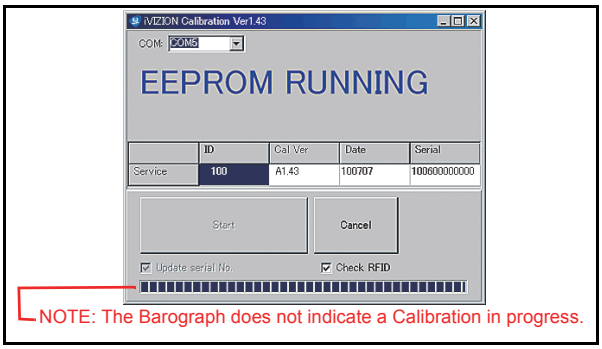

Figure 6-49 Calibration Value Writing Screen

20. When the Calibration Value writing EEPROM writing is complete, the "**Calibration Information**" Screen shown in Figure 6-50 will re-appear.
21. Mouse-click on the "OK" Screen Button (See Figure 6-50 a).

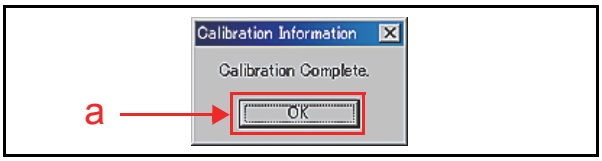

Figure 6-50 Calibration Complete Screen

This completes the Paper Calibration Procedures. Refer to "Reference Paper Use Precautions" on page 1-3 of Section 1 to properly store and prevent damage to the KS-072 Reference Paper.

Calibration Plus Serial Number Writing

When the Sensor Calibration procedure is complete, the capability to write the Serial Number into the iVIZION® Unit becomes possible. To write a Serial Number into Memory, proceed as follows:

1. Complete the initial Sensor Calibration Procedure first (See "Calibration Only" on page 6-7 of this Section).

   *NOTE: To perform the "Writing Serial No.", process, Mouse-Click on the "*Update serial No.*" Check-box when the "iVIZION Calibration Ver.X.XX" Screen is active (See iVIZION Calibration Ver.X.XX Screen Figure 6-36 b on page 6-8 of this Section).*

2. Once the CIS Sensor Calibration is complete, the "**iVIZION Calibration Service Suite Edition**" Screen shown in Figure 6-51 will appear.

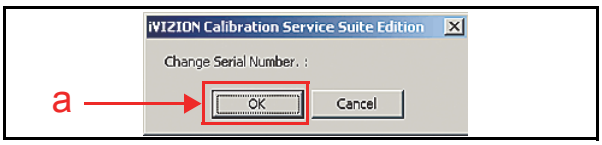

Figure 6-51 iVIZION Calibration Service Suite Edition Screen

3. Mouse-click on the "OK" Screen Button (See Figure 6-51 a). The "**Setting Manufacture No**" Screen shown in Figure 6-52 will then appear.
4. Mouse-click on either the "▲" or "▼" Triangle Indication Buttons in each Serial Number Box located at the bottom of the Screen to either increase or decrease the numbers, or change the existing numbers using the "▲" or "▼" Triangle Button (See Figure 6-52 a).
5. Mouse-click on the "✓ OK" Screen Button located on the right side of the Screen (See Figure 6-52 b).

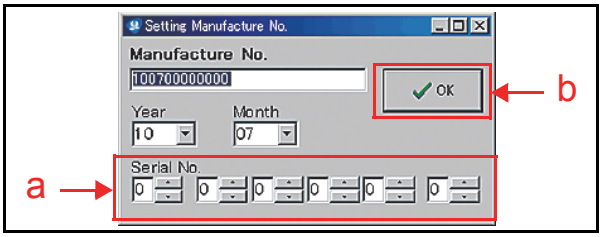

Figure 6-52 Setting Manufacture No. Screen

The Calibration Value and the Serial Number will then be written into the EEPROMs on the Sensor and the CPU Boards (See Figure 6-53).

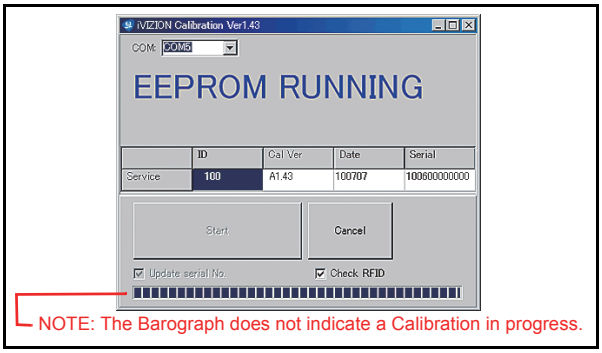

Figure 6-53 Calibration Value Writing Screen

When the data writing into the EEPROM is complete, the "**Calibration Information**" Screen shown in Figure 6-54 will re-appear.

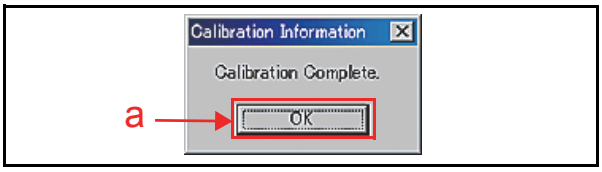

Figure 6-54 Adjustment Info Screen 8

6. Mouse-click on the "OK" Screen Button (See Figure 6-54 a).

This completes the Serial Number Writing Procedures.

Performance Tests

This portion explains the iVIZION® Performance Test Procedures. The following two (2) methods exist to perform this Performance Test Procedure.

- Performance Test using a PC
- Performance Test using the External DIP Switches.

Choose one (1) of the two (2) above Performance Test Procedures by selecting the one related to the particular circumstance desired.

Performance Test Tool Requirement using a PC

Figure 6-55 illustrates and list identifies the Tools and Equipment Interconnects required to perform a PC iVIZION® Performance Test.

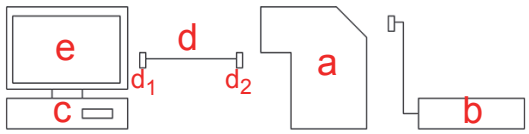

a) iVIZION Device
b) Power Supply
c) PC (OS: Windows XP) (iVIZION USB Driver Installed)
d) USB Cable
 d_1) USB A Terminal
 d_2) USB Mini-B Terminal
e) Application Software*
 (JCM Tool Suite Standard Edition)

*. Contains USB Downloader, Sensor Calibration, Performance Test programs and Utility.

Figure 6-55 PC Performance Test Tools Required

Performance Test Items using a PC

Table 6-2 lists the available Performance Test Items and their purpose using a PC for testing.

Table 6-2 PC Performance Test Items

No.	Test Item	Test Purpose	Status LED	
			Stand-by	Operating
1	Motor Normal Rotation	Testing the Transport Motor rotation in a Banknote intake direction	Blue Lit	Yellow Flashes
2	Motor Reverse Rotation	Testing the Transport Motor rotation in a Banknote reject direction		
3	Stacker Motor	Testing the Stacker Motor's movement		
4	Cycle Movement	Testing sequential movement from Banknote trans-portation to stacking at regular intervals without Banknotes		
5	Status LED Indication	Testing the Status LED Indications		Red Green Blue
6	Sensor ON/OFF	Testing each Sensor's Performance		Blue Lit
7	DIP Switch ON/OFF	Testing the 8-Position DIP Switches Performance		
8	Banknote Acceptance	Testing Transportation, Validation, Stacking and Reject Performance, and the Vend Signal Output	Blue Lit	Extinguished (Out)
9	ICB Setting (Reading Ticket)	Checking the ICB Enable/Disable Setting of the ICB Machine No.		

PC Performance Test Preparation

Perform following steps to begin the Performance Test Preparation Procedure:

1. Turn the iVIZION® Unit's Power Switch **OFF**.
2. Remove the Transport Unit from the Frame.
3. Set 8-Position DIP Switch #8 to **ON**.

Figure 6-56 DIP Switch #8 Set ON

4. Place the Transport Unit into the Frame.
5. Turn the iVIZION® Unit's Power Switch **ON**. The Status LED will light a stable Blue Color.
6. Launch the "JCM Tool Suite Standard Edition" Application. The Screen shown in Figure 6-57 will appear when the application becomes activate.
7. Mouse-click on, and hold-down the "Service Mode" selection pull-down Menu (See Figure 6-57 a) and Slide-down select "Performance Test" from the Pull-Down Menu Sections (See Figure 6-57 b).

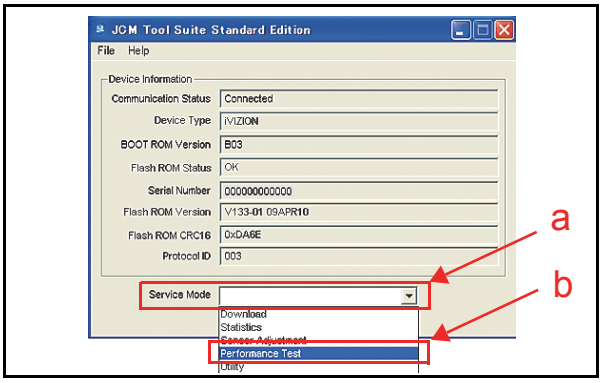

Figure 6-57 JCM Tool Suite Standard Edition Screen

8. Activate the "iVIZION Test Item VerX.XX" Application and the Screen shown in Figure 6-58 will automatically appear.

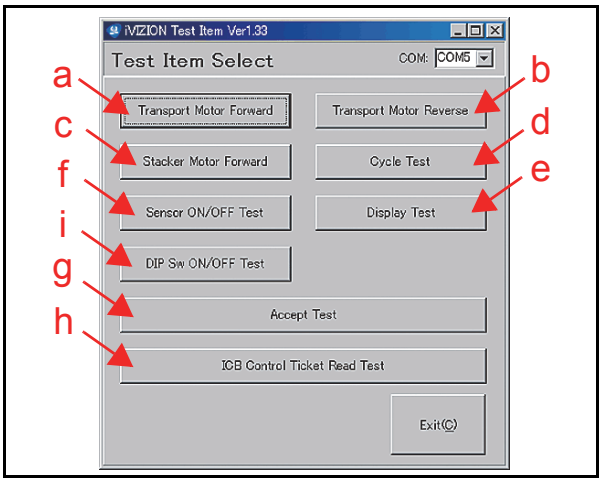

Figure 6-58 iVIZION Test Item VerX.XX Screen

9. Mouse-click on each Screen Button to begin its related Performance Test. A Screen similar the Screen shown in Figure 6-59 will appear for each Test. For more detail concerning each Performance Test, refer to "Performance Test Items using a PC" on page 6-11 of this Section.

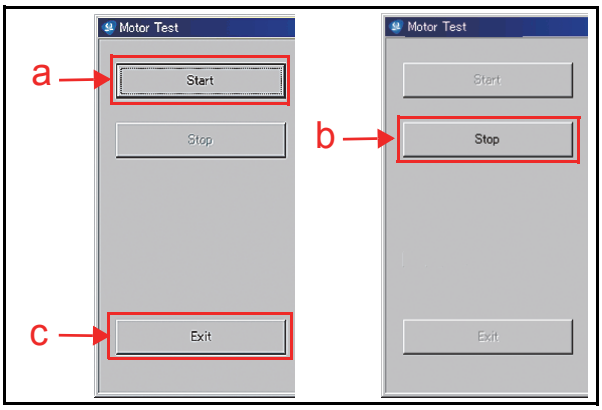

Figure 6-59 Start, Stop & Exit Screen Button

10. Mouse-click on the related "Start" Screen Button (See Figure 6-59 a) to begin the desired Performance Test. When all of the desired Performance Tests are complete, Mouse-click on the "Stop" Screen Button (See Figure 6-59 b).
If a return to the "**Test Item Select**" Screen is desired, Mouse-click on the "Exit(C)" Screen Button (See Figure 6-59 c).

Performance Test Procedures

This portion provides information concerning each Performance Test Procedure.

Any Motor Test

Perform the following steps to test the Transport Motor's Normal Forward Rotation, the Transport Motor's Reverse Rotation, and the Stacker Motor's operation with a complete Cyclic Movement Test.

The following four (4) Motor Tests available:

- Transport Motor Normal Forward Rotation Test
- Transport Motor Reverse Rotation Test
- Stacker Motor Test
- Cyclic Movement Test.

To run a specific Test, proceed as follows:

1. Launch the "**Test Item Select**" Screen (Refer to the "PC Performance Test Preparation" on page 6-11 of this Section).
2. Mouse-click on the desired Test Screen Button from the Menu Screen provided (Refer back to Figure 6-58 a, b, c & d).
3. Mouse-click on the "Start" Screen Button (Refer back to Figure 6-60 a) to begin each Test.
4. Check that the Status LED is blinking at a Yellow Color rate. (See Table 6-3 to identify the various Status LED conditions).
5. Mouse-click on the "Stop" Screen Button (See Figure 6-60 b) to end each Test.
6. Mouse-click on the "Exit" Screen Button (See Figure 6-60 c) to return to the "**Test Item Select**" Screen.

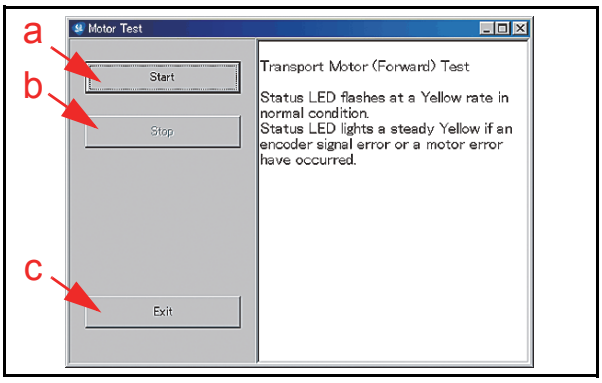

Figure 6-60 Transport Motor Normal Forward Test Screen

Table 6-3 lists the Status LED indications for each normal or abnormal Test Item condition.

Table 6-3 LED Indications for each condition

Test Item	Screen Button	Status LED	
		Normal	Abnormal
Transport Motor Normal Forward Rotation	Transport motor Forward	Yellow Flashes	Lit Yellow or Extinguished (Out)
Transport Motor Reverse Rotation	Transport motor Reverse		
Stacker Motor	Stacker motor Forward		
Cyclic Movement*	Cycle Test		Red Flashes

*. Once the Cycle Movement Test is complete, transport movement will halt for approximately 25 seconds; then re-begin the test again. (See "Error, Jam and Reject Code Tables" on page A-2 of Appendix A in this Service Manual when the Status LED indicates an abnormal operating condition).

LED Indicator Test

Perform the following steps to test the LED Indicators.

1. Launch the "**Test Item Select**" Screen again (Refer to "PC Performance Test Preparation" on page 6-11 of this Section).
2. Mouse-click on the "**Display Test**" Screen Button (See Figure 6-58 e).
3. Mouse-click on the "Start" Screen Button (See Figure 6-61 a) to begin the LED Indicator Test.

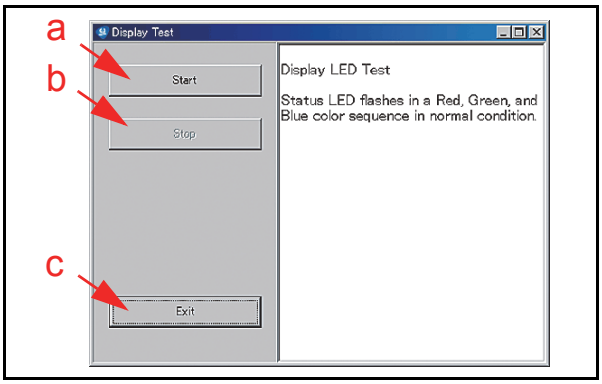

Figure 6-61 LED Indicator Test Screen

4. Check the Status LED's condition. When the Status LED Indicator blinks in a Red, Green, and Blue Color sequence, the Status LED is performing normally.
5. Mouse-click on the "Stop" Screen Button (See Figure 6-61 b) to end the LED Indicator Test.
6. Mouse-click on the "Exit" Screen Button (See Figure 6-61 c) to return to the "**Test Item Select**" Screen.

SENSOR ON/OFF TEST

Perform the following steps to perform the Sensor ON/OFF Test.

1. Launch the "**Test Item Select**" Screen again (Refer to "PC Performance Test Preparation" on page 6-11 of this Section).
2. Mouse-click on the "Sensor ON/OFF Test" Screen Button (See Figure 6-58 f).
3. Mouse-click on the "Start" Screen Button (See Figure 6-62 a) to begin the Sensor ON/OFF Test. The current testing condition is indicated in a column adjacent to the Function being tested on the Figure 6-62 Screen.

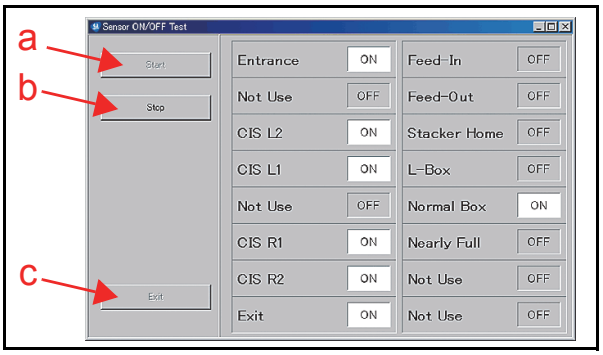

Figure 6-62 Sensor ON/OFF Test Screen

Five (5) actions are required to check all twelve (12) Sensors in the iVIZION® Unit. Refer to Table 6-4 for each action regarding the related Sensor being tested.
When the desired test action is complete, the resulting condition of each Sensor is indicated by its Screen condition turning "ON".

Table 6-4 Sensor Actions and Conditions

Action	Sensor	Condition
Open the Acceptor Unit's Upper Guide	Entrance	OFF→ON
	CIS L2	
	CLS L1	
	CIS R1	
	CIS R2	
	Exit	
Open the Transport Unit's Upper Guide	Feed-In	OFF→ON
	Feed-Out	
No Action Required (Seat the Cash Box correctly in place)	Cash Box (Large Cash Box or Standard Cash Box)	OFF→ON
Remove the Cash Box from the Unit	Nearly Full	OFF→ON

Table 6-4 Sensor Actions and Conditions (Cont.)

Action	Sensor	Condition
Hold-down the Pusher Plate and slide a 80x50mm piece of Cardboard in-between the Frame Outer LR and the Pusher Plate*	Home Position	OFF→ON

*. Review Figure 6-40 and Figure 6-41 on page 6-8 regarding how to set the Cardboard in place.

4. Mouse-click on the "Stop" Screen Button (See Figure 6-62 b) to end the Sensor ON/OFF Test.
5. Mouse-click on the "Exit" Screen Button (See Figure 6-62 c) to return to the "**Test Item Select**" Screen.

BANKNOTE ACCEPTANCE TEST

Perform the following steps to test the transportation, validation, stacking and reject sequential performance and Vend Signal Output functions of the iVIZION® Unit.

1. Launch the "**Test Item Select**" Screen again (Refer to "PC Performance Test Preparation" on page 6-11 of this Section).
2. Mouse-click on the "**Accept Test**" Screen Button (See Figure 6-58 g).
3. Mouse-click on the "Start" Screen Button (See Figure 6-63 a) to begin the Banknote Transport Test.
4. Insert a Banknote into the iVIZION® Unit. The Banknote's Denomination will be indicated on a Screen similar to Figure 6-63d.

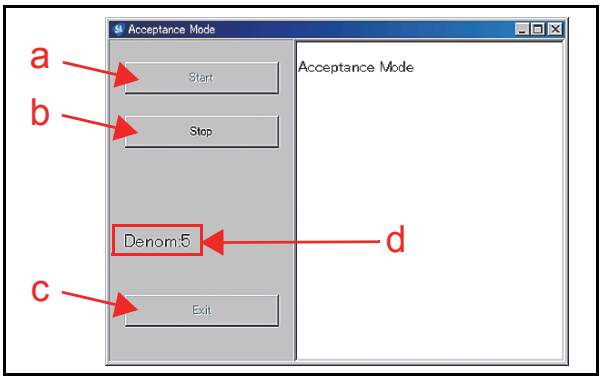

Figure 6-63 Denomination Indication Location

Table 6-5 Denomination Valuation List

Denomination	Value Indication
$1	1
$5	5
$10	10
$20	20
$50	50
$100	100

5. Mouse-click on the "Stop" Screen Button (See Figure 6-63 b) to quit from the related Test Screen.
6. Mouse-click on the "Exit" Screen Button (See Figure 6-63 c) to return the "**Test Item Select**" Screen.

NOTE: If the intent is to perform other tests, close all of the Screens open on the PC, and turn the iVIZION Power Switch OFF; then,
Turn the iVIZION Power Switch back ON, and re-begin the Performance Test Procedures over again.

ICB Function Setting (Barcode Coupon)

Perform the following steps to set the ICB Enable/ Disable Functions when using a Barcode Coupon.

To enable the ICB function:

1. Launch the "**Test Item Select**" Screen again (Refer to "PC Performance Test Preparation" on page 6-11 of this Section).
2. Mouse-click on the "ICB Control Ticket Read Test" Screen Button (See Figure 6-58 h).
3. Mouse-click on the "Start" Screen Button (See Figure 6-64 a) to begin the ICB Function Setting.

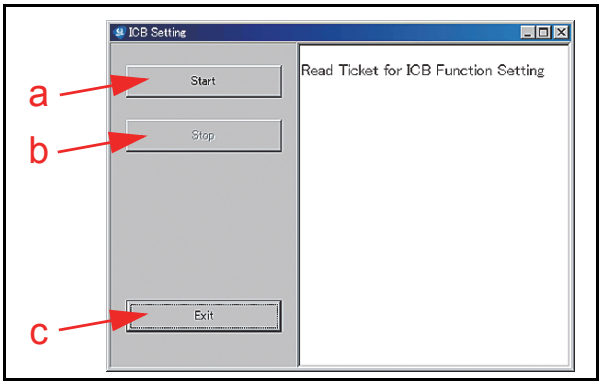

Figure 6-64 ICB Function Test Screen

4. Insert an "ICB Enable Ticket" Barcode Coupon. The Status LED will blink three (3) times at a Green Color rate when the ICB Enable Ticket is being read correctly.
5. Once the Status LED begins blinking normally, insert a "JCM Global" Barcode Coupon in order to configure the Machine Number for the iVIZION® Unit being tested. The Status LED will blink three (3) times at a Green Color rate when the Machine Number is being read correctly.
   If the Status LED blinks at a Blue Color rate, an error condition has occurred (See "Error, Jam and Reject Code Tables" on page A-2 of Appendix A in this Service Manual for more details).
6. Mouse-click on the "Stop" Screen Button (See Figure 6-64 b) to complete the ICB Function Setting operation.
7. Mouse-click on the "Exit" Screen Button (See Figure 6-64 c) to return to the "**Test Item Select**" Screen.

NOTE: If the intent is to perform other tests, close all of the Screens open on the PC, and turn the iVIZION Power Switch OFF; then,
Turn the iVIZION Power Switch back ON, and re-begin the Performance Test Procedures over again.

To disable the ICB function:

1. Launch the "**Test Item Select**" Screen (Refer to "PC Performance Test Preparation" on page 6-11 of this Section).
2. Mouse-click on the "ICB Control Ticket Read Mode" Screen Button (See Figure 6-58 h).
3. Mouse-click on the "Start" Screen Button (See Figure 6-64 a) to begin the ICB Function Setting operation.
4. Insert an "ICB Disable Ticket" Barcode Coupon. The Status LED will blink three (3) times at a Green Color rate when the ICB Disable Ticket reading is properly completed.
   If the Status LED is blinks at a Blue Color rate, some error condition has occurred (See "Error, Jam and Reject Code Tables" on page A-2 of Appendix A in this Manual for more details).
5. Mouse-click on the "Stop" Screen Button (See Figure 6-64 b) to finish the ICB Function Setting operation.
6. Mouse-click on the "Exit" Screen Button (See Figure 6-64 c) to return to the "**Test Item Select**" Screen.

NOTE: If the intent is to perform other tests, close all of the Screens open on the PC, and turn the iVIZION Power Switch OFF; then,
Turn the iVIZION Power Switch back ON, and re-begin the Performance Test Procedures over again.

DIP Switch ON/OFF Test

Perform following steps to test the 8-Position DIP Switch ON/OFF Functions:

1. Turn the iVIZION® Power Switch to **OFF**.
2. Remove the Transport Unit from the iVIZION® Unit's upper Section.
3. Set the desired DIP Switches being tested to **ON** and set DIP Switch #8 to **ON**. DIP Switch #8 will always be set to ON during all remaining Switch Tests being performed (The Figure 6-65 example shows DIP Switch #3 and #5, plus DIP Switch #8 all set to **ON**).

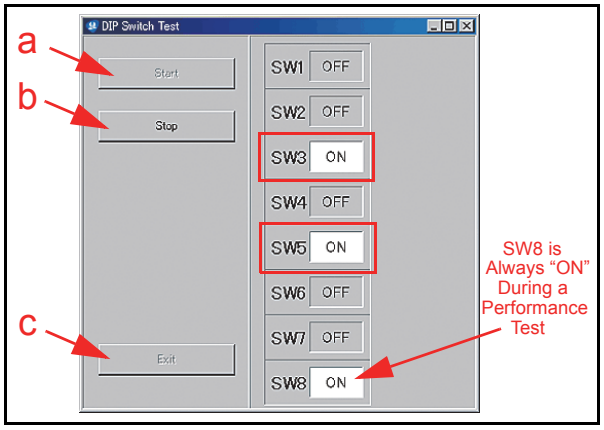

Figure 6-65 DIP Switch ON/OFF Test Screen 1

4. Launch the "**Test Item Select**" Screen (Refer to "PC Performance Test Preparation" on page 6-11 of this Section).

5. Mouse-click on the "DIP Sw ON/OFF Test" Screen Button (Review Figure 6-58 i) to begin the DIP Switch ON/OFF Test.
6. Mouse-click on the "Start" Screen Button (See Figure 6-65 a). The tested DIP Switch condition will be indicated on the Screen similar to that shown in Figure 6-65. Make sure the desired DIP Switch Number is shown as "ON".

   NOTE: If DIP Switch #3 and #5 were set during a previous procedure, the Screen will indicate "ON" in each Field Window related to their DIP Switch Number.
7. Set the desired DIP Switch to **OFF** (Figure 6-65 example = DIP Switch #3 and #5).
8. Make sure the desired DIP Switch Number is "OFF". (If DIP Switch #3 and #5 were set during a previous procedure, the Screen will indicate "ON" in each Field Window related to their DIP Switch Number).

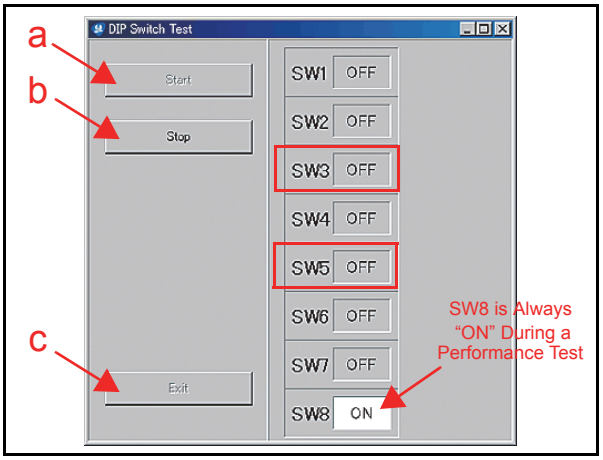

Figure 6-66 DIP Switch ON/OFF Test Screen 2

9. Mouse-click on the "Stop" Screen Button (See Figure 6-65 b) to end the DIP Switch ON/OFF Test.
10. Mouse-click on the "Exit" Screen Button (See Figure 6-65 c) to return to the "**Test Item Select**" Screen.
11. Turn the iVIZION® Power Switch **OFF**.
12. Place the Transport Unit onto the Frame.

NOTE: If it is necessary to perform another test, make sure that DIP Switch No.8 is still set to ON.

Performance Test Tool Requirement using an External DIP Switch Box

Figure 6-67 illustrates and list identifies the Tools and equipment interconnects necessary to perform the iVIZION® Performance Tests using an External Switch Box.

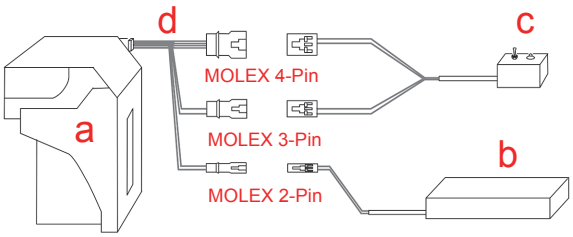

a) iVIZION Device
b) Power Supply (12V DC - 24V DC)
c) External Switch Box (User provided)
d) Interface Cable (3380-05-01 EDP#146780)

Figure 6-67 Calibration Tool Requirements

External DIP Switch Performance Test Procedure Settings

Table 6-2 lists the DIP Switch settings for the Performance Tests using the External Switch Box.

Table 6-6 Performance Test DIP Switch Settings*

No.	Test Item	Status LED		DIP Switch Setting (O = ON)							
		Stand-by	Operat-ing	1	2	3	4	5	6	7	8
1	Motor Normal Forward Rotation	Blue Lit	Yellow Flashes	-	O	-	-	-	-	-	O
2	Motor Reverse Rotation			O	O	-	-	-	-	-	O
3	Stacker Motor			-	-	O	-	-	-	-	O
4	Cyclic Movement			-	-	-	O	-	-	-	O
5	Status LED Indication		Red / Green / Blue	-	-	-	-	O	-	-	O
6	Banknote Accept-ance		Exting-uished (Out)	O	O	O	O	-	-	-	O
7	ICB Setting (Reading Ticket)			O	-	-	O	-	-	-	O

*. NOTE: The Sensor ON/OFF Test and the DIP Switch ON/OFF Test are ONLY available when using the PC procedure!

Performance Tests using the External DIP Switch Procedures

Perform the following steps to test the Motor Normal Forward and Reverse Rotation, the Stacker Motor, the Cyclic Movement Test, the Status LED Indication Test, the Banknote Transportation and the ICB Function Setting Performance Tests.

1. Turn the iVIZION® Power Switch **OFF**.
2. Remove the Transport Unit from the Frame.
3. Set the desired DIP Switch Number to "**ON**" using the 8-Position DIP Switch (See Table 6-6).
4. Place the Transport Unit back onto the Frame.
5. Connect the third the fourth Pin Connector of the External Switch Box Cable to the corresponding Connectors Pins of the five (5) Pin Plug located at the rear side of the iVIZION® Transport Unit

6. Set the External Switch Box Switch to the position away from the Status LED on the Box.
7. Turn the iVIZION® Power Switch to **ON**. The iVIZION® Status LEDs will indicate Stand-by Mode when the Status LED on the iVIZION® Lights a steady Blue Color, and the Status LED on the External Switch blinks at a Red Color rate.
8. Turn the External Switch Box Switch toward the iVIZION® status LED on the Box when the iVIZION® Power Switch is turned to ON. The desired Test selected by DIP Switch Positions will then begin (Refer to "Performance Test Procedures" on page 6-12 of this Section for each test and its resulting Test indication).
9. Return the External Switch Box Switch to the position away from the iVIZION® Status LED on the Box again, and the current Test being run will end. If other Switch Box Tests are necessary, restart from Step 1 at the beginning of this procedure.

iVIZION Utility Tools

This portion provides information regarding each iVIZION® Service Mode setting procedure.

The following two (2) Tool setting types exist when using the iVIZION Utility Tools:

- CIS Image Views
- ICB Function Settings.

ICB/Image Setting Tool Requirements

The Tools listed in Figure 6-68 are required to set or change each iVIZION® ICB Setting.

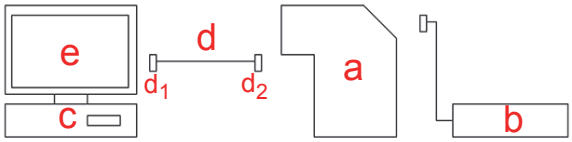

a) iVIZION Device
b) Power Supply
c) PC (OS: Windows XP/iVIZION USB Driver Installed)
d) USB Cable
d_1) USB "A" Terminal Plug
d_2) USB "Mini-B" Terminal Plug
e) Application Software*
(JCM Tool Suite Standard Edition).

*. Containing USB Downloader, Sensor Calibration, Performance Test programs and Utility.

Figure 6-68 ICB Setting Tool Requirements

NOTE: The ICB Function Status is initially Factory Set to "INHIBIT" as a standard function. Therefore, the iVIZION Unit's ICB must be first initialized using the USB Tool Suite Utility Options. Refer to the JCM ICB Installation Guide for exact programming descriptions and operational details.

ICB/Image Setting Change Preparation

Perform the following steps to set or reset the ICB Functions.

1. Turn the iVIZION® Unit's Power Switch to **ON**.
2. Launch the "JCM Tool Suite Standard Edition" Application. The Figure 6-69 Screen will appear when the application becomes activate.
3. Mouse-click on, and hold-down on the "Service Mode" selection Pull-down Menu (See Figure 6-69 a), and Slide-down select "Utility" from the Pull-Down Menu Sections (See Figure 6-69 b). The "**iVIZION Utility Tool Version X.XX for Suite Edition**" Application Menu selection Screen shown in Figure 6-70 will automatically appear.

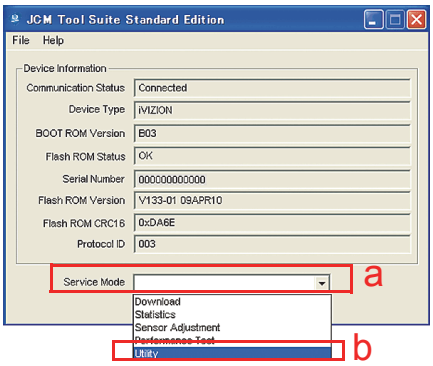

Figure 6-69 JCM Tool Suite Standard Edition

CIS Image Tool

The CIS Image Tool provides graphic views of the scanned Banknote images directly. This feature is available to confirm the last stacked Banknote denomination by presenting its scanned front and back images.

1. Mouse-click on the large "**1) CIS IMAGE**" Screen Button located on the "**iVIZION Utility Tool**" Screen (See Figure 6-70 a).
2. Confirm that the "**CIS Image**" Screen shown in Figure 6-71 appears.
3. Mouse-click on the "Read" Screen Button (See Figure 6-72 a) to see an image of the last scanned Banknote's upper and lower surface images on the Screen (See Figure 6-72 b & c).
4. Mouse-click on the "File Save" Screen Button (See Figure 6-71 b) if necessary to save the data.
5. Mouse-click on the "File Read" Screen Button (See Figure 6-71 c) to retrieve the saved file data.

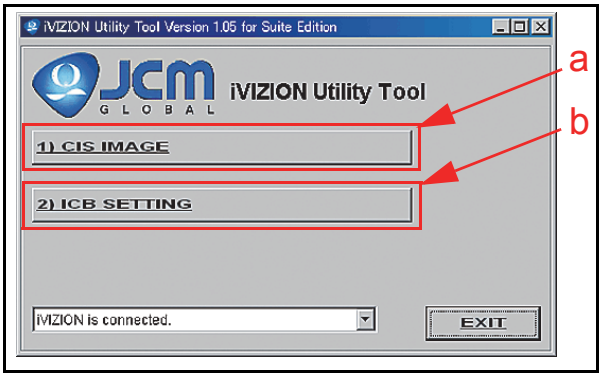

Figure 6-70 iVIZION Utility Tool Version X.XX for Suite Edition Screen 1

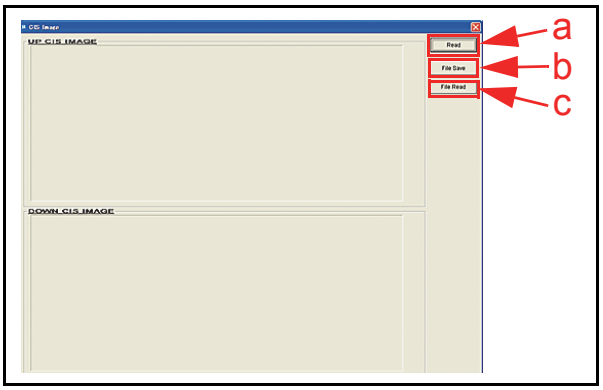

Figure 6-71 Empty CIS IMAGE Screen

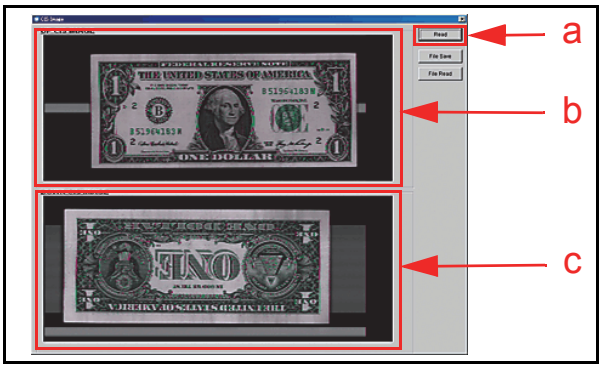

Figure 6-72 Last Acceptance CIS IMAGE Screen

NOTE: The CIS Image data will not be retained if the iVIZION's Power Supply is turned OFF after stacking the last Banknote!

ICB Function Setting

This portion provides information about each Screen Button located on the "**ICB Function**" Screen shown in Figure 6-74.

The following three (3) setting types are available for use with the ICB Functions:

- Setting the ICB Enable/Disable Function
- Setting the Machine Number
- Setting the ICB Inhibit Function.

Setting ICB Enable/Disable Functions

The following portion explains each ICB setting when activated:

1. Mouse-click on the large "**2) ICB SETTING**" Screen Button (See Figure 6-73 a) located on the "**iVIZION Utility Tool**" Screen.

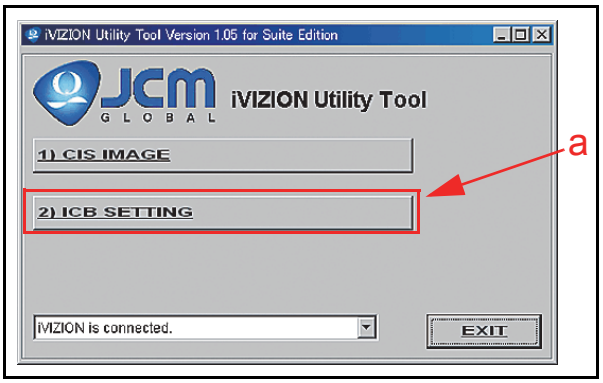

Figure 6-73 iVIZION Utility Tool Version X.XX for Suite Edition Screen 2

2. Confirm that the "**ICB Function**" Screen shown in Figure 6-74 appears (See Figure 6-74). Seven (7) Screen Buttons exist on this Screen.

To begin using the "**ICB Function**" Screen Buttons, select the ICB "Enable / Disable" Function desired by first Mouse-clicking on the appropreate Screen Button (See Figure 6-74 a & b).

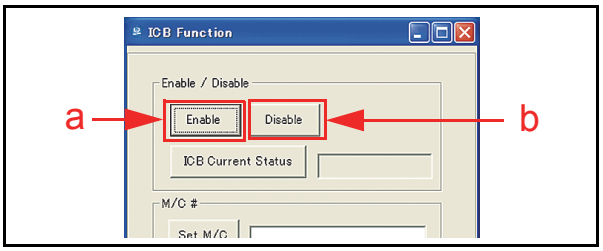

Figure 6-74 ICB Function Screen

Enable Screen Button Activation

Set the ICB "Enable" Function when an RFID Circuit Board exists on the iVIZION® Unit. However, if the Cash Box IS SET to a "System Inhibit" condition, or the RFID Circuit Board IS NOT present, the Status LED will flash at a Blue Color rate to notify that an error exists (See Table 6-7 on page 6-19 of this Section to resolve this issue).

To set ICB Enable proceed as follows:

1. First, confirm that the Cash Box setting IS NOT set to "System Inhibit"; then Mouse-click on the "Enable" Screen Button (See Figure 6-74 a) to activate the ICB Function.
2. When the ICB Function is correctly enabled, the "**ICB Successfully Enabled.**" pop-up Dialog Message Window shown in Figure 6-75 will appear.
3. Mouse-click the "OK" Screen Button (See Figure 6-75 a) to accept the reported message.

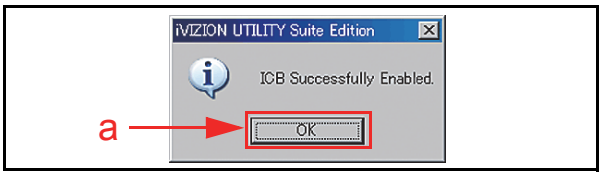

Figure 6-75 Enable Setting Completion

Disable Screen Button Activation

Set the ICB "Disable" Function when an RFID Circuit Board DOES NOT exist on the iVIZION® Unit. However, if the Cash Box IS SET to a "System Inhibit" condition, or the RFID Circuit Board IS present, the Status LED will flash at a Blue Color rate to notify that an error exists (See Table 6-7 on page 6-19 of this Section to resolve this issue).

To set ICB Disable proceed as follows:

1. First, confirm that the Cash Box setting is not already set to "System Inhibit"; then Mouse-Click on the "Disable" Screen Button (See Figure 6-74 b) to inhibit the iVIZION's® ICB Function.
2. When the ICB Function is correctly disabled, the "**ICB Successfully Disabled**" pop-up Dialog Message Window shown in Figure 6-76 will appear.
3. Mouse-click the "OK" Screen Button (See Figure 6-76 a) to accept the reported message.

Figure 6-76 Disable Setting Completion

ICB Current Status Screen Button

To check the current ICB Enable/Disable Setting Status proceed as follows:

1. Mouse-click on the "ICB Current Status" Screen Button (See Figure 6-77 a).
2. The Current ICB Enable/Disable Status will appear in a Field Window next to the "ICB Current Status" Screen Button (See Figure 6-77 b).

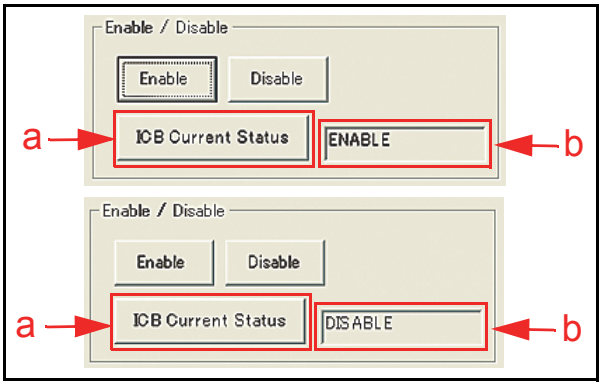

Figure 6-77 ICB Current Status Screen

Setting the M/C

This setting allows the individual fourteen (14) digit Machine Code Number on the iVIZION® to be entered. The Machine Number helps to identify to which Game Machine the iVIZION® belongs, and avoids using its Cash Box for use in another Game Machine.

To enter and set a Machine Code Number, proceed as follows:

1. Type the fourteen (14) Machine Code Number in the Text Field Window located next to the "Set M/C" Screen (See Figure 6-78 b).
2. Mouse-click on the "Set M/C" Screen Button (See Figure 6-78 b) to set the Machine Number.

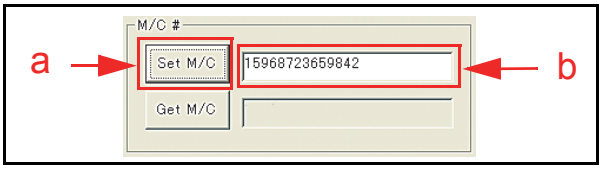

Figure 6-78 Machine Number Setting

NOTE: When the Machine Code Number is less than fourteen (14) digits in length, add zeros "0" to the head of the Machine Number in order to create a recognizable 14 digit Code Number.

3. When the Machine Number is correctly set, the "M/C# Set Successfully" pop-up Dialog Message Window shown in Figure 6-79 will appear.
4. Mouse-click the "OK" Screen Button (See Figure 6-79 a) to accept the reported message.

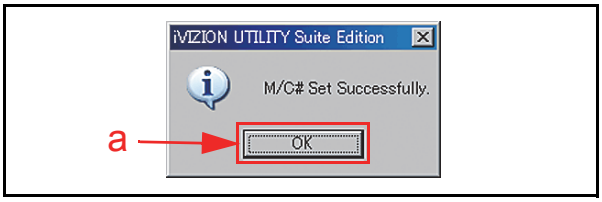

Figure 6-79 Machine Number Setting Completion

To retrieve the current Machine Code Number set in an iVIZION® Unit proceed as follows:

1. Mouse-click on the "Get M/C" Screen Button (See Figure 6-80 a).
2. The existing fourteen (14) Machine Code Number will appear in the Text Field Window located next to the "Get M/C" Screen Button (See Figure 6-80 b).

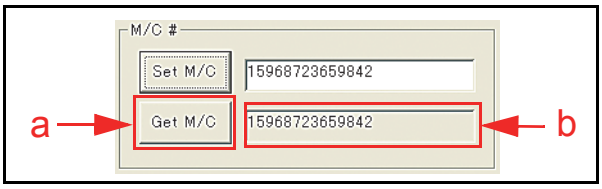

Figure 6-80 Machine Number Indication

Setting Inhibit ICB System

To record an ICB Function Inhibit setting in the Cash Box when an iVIZION® Unit RFID Circuit Board exists, proceed as follows:

1. Mouse-click on the "Inhibit" Screen Button (See Figure 6-81 a).

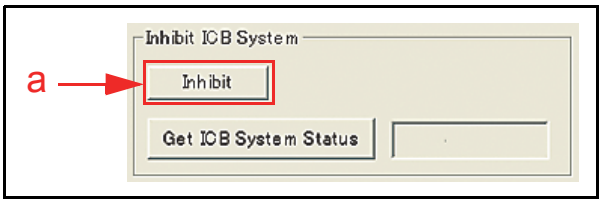

Figure 6-81 Inhibit Screen Button Location

NOTE: The JCM Factory Default Setting is "Inhibit" (See Table 6-7).

2. When the ICB Inhibit Function in a Cash Box is properly set, the "ICB Inhibition Successfully" pop-up Dialog Message Window shown in Figure 6-82 will appear.
3. Mouse-click on the "OK" Screen Button (See Figure 6-82 a) to accept the reported message.

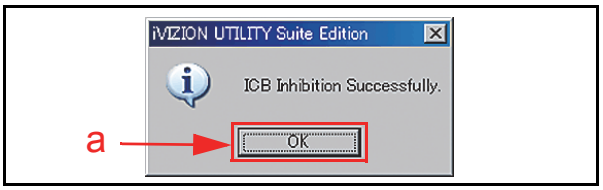

Figure 6-82 Inhibit Setting Completion

To retrieve the current ICB Function Setting in a Cash Box proceed as follows:

1. Mouse-click on the "Get ICB System Status" Screen Button (See Figure 6-80 a).
2. The existing ICB Inhibit Function set in the Cash Box will appear in the pop-up Dialog Message Window next to the "Get ICB System Status" Screen Button (See Figure 6-80 b).

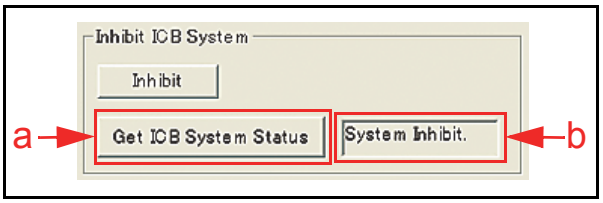

Figure 6-83 ICB System Status Indication

ICB Function Operational Condition

Table 6-7 lists various functional combinations available for the iVIZION® Unit, RFID Board, Cash Box and ICB Function Settings (Refer to "Error, Jam and Reject Code Tables" on page A-2 of Appendix A in this Manual for more details concerning each error type).

Table 6-7 ICB Setting Function Operational Condition

iVIZION	RFID Board	Cash Box	Initialization Cash Box	Installed the same Machine	Installed another Machine	Read/Write Tool Data Correction	Checksum Errors
Enable	Installed	NOT System Inhibit	OK	OK	Not Available	Not Available	Not Available
		System Inhibit	Not Available	Not Available	Not Available	Not Available	Not Available
	NOT Installed	-	Not Available	Not Available	Not Available	Not Available	Not Available
Disable	Installed	NOT System Inhibit	Not Available	Not Available	Not Available	Not Available	Not Available
		System Inhibit	OK	OK	OK	OK	OK
	NOT Installed	-	OK	OK	OK	OK	OK

13920

THIS PAGE INTENTIONALLY LEFT BLANK

iVIZION® Series

Next-Generation Banknote Acceptor Unit

Section 7

7 EXPLODED VIEWS & PARTS LISTS

This section provides product exploded views and parts lists for the iVIZION® Next-Generation Banknote Acceptor Unit. This section contains the following information.

- iVIZION Entire Unit View and Parts List
- iVIZION Validation Unit Exploded View
- iVIZION Transport Unit Exploded View
- iVIZION Frame Unit Exploded View
- iVIZION Cash Box Unit Exploded View
- iVIZION Option Unit Exploded View.

iVIZION Entire Unit Exploded View

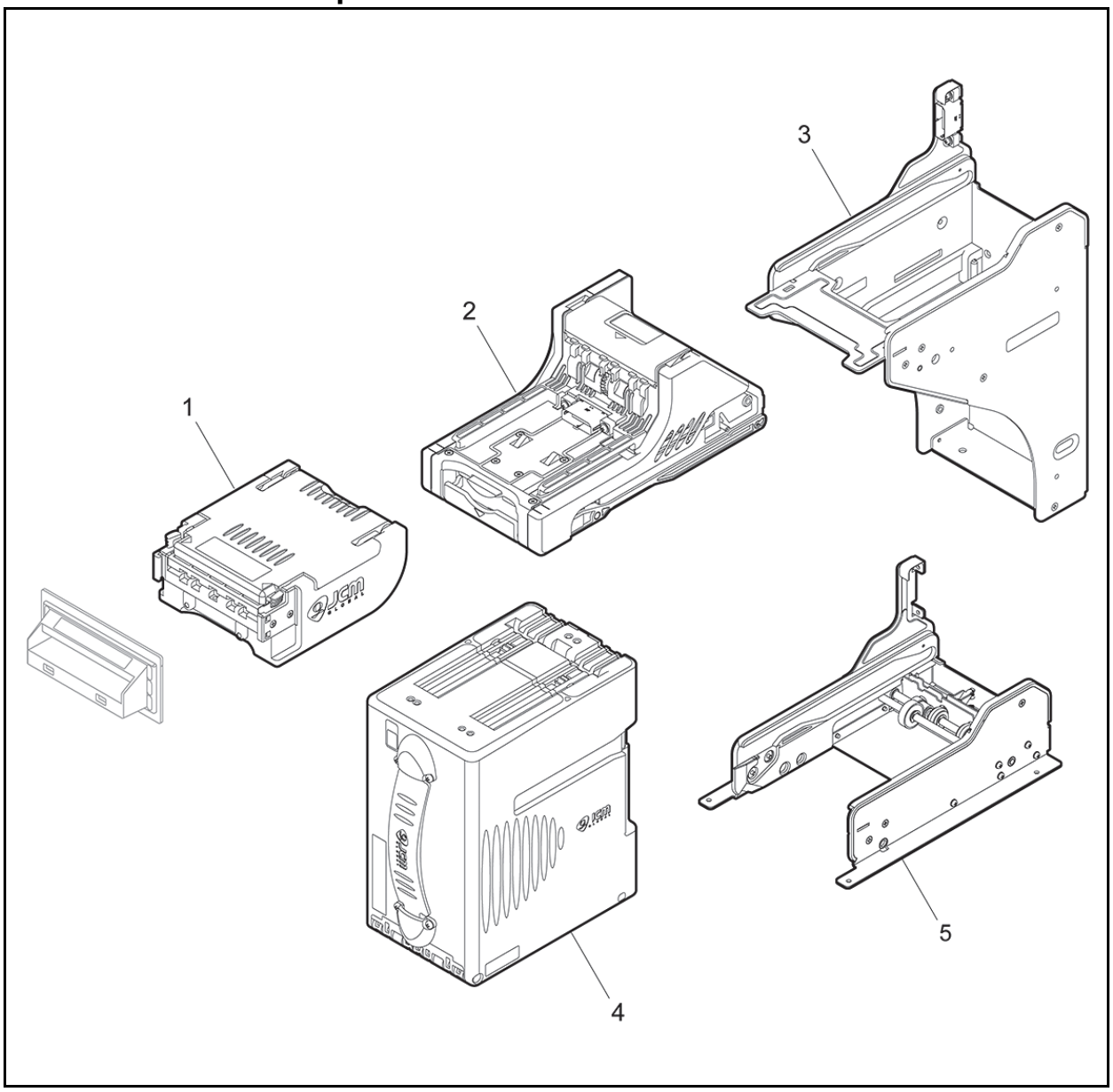

Figure 7-1 iVIZION Entire Unit Exploded View Diagram

iVIZION Entire Unit Parts List

Table 7-1 iVIZION Entire Unit Parts List

Ref No.	EDP No.	Description	Qty	Remark
1	148069	iVIZION Validation Unit	1	See Table 7-2 through Table 7-4 for details regarding the Validation Unit Parts
2	148070	iVIZION Transport Unit	1	See Table 7-5 through Table 7-10 for details regarding the Transport Unit Parts
3	149468	iVIZION Frame Unit	1	See Table 7-11 for details regarding the Frame Unit Parts
4	148856	iVIZION Cash Box (S)	1	See Table 7-12 through Table 7-14 for details regarding the Cash Box Unit Parts
	148857	iVIZION Cash Box (L)	1	
5	206387	iVIZION LD Frame Unit	1	See Table 7-15 for details regarding the LD Frame Unit Parts

iVIZION Validation Unit 1 Exploded View

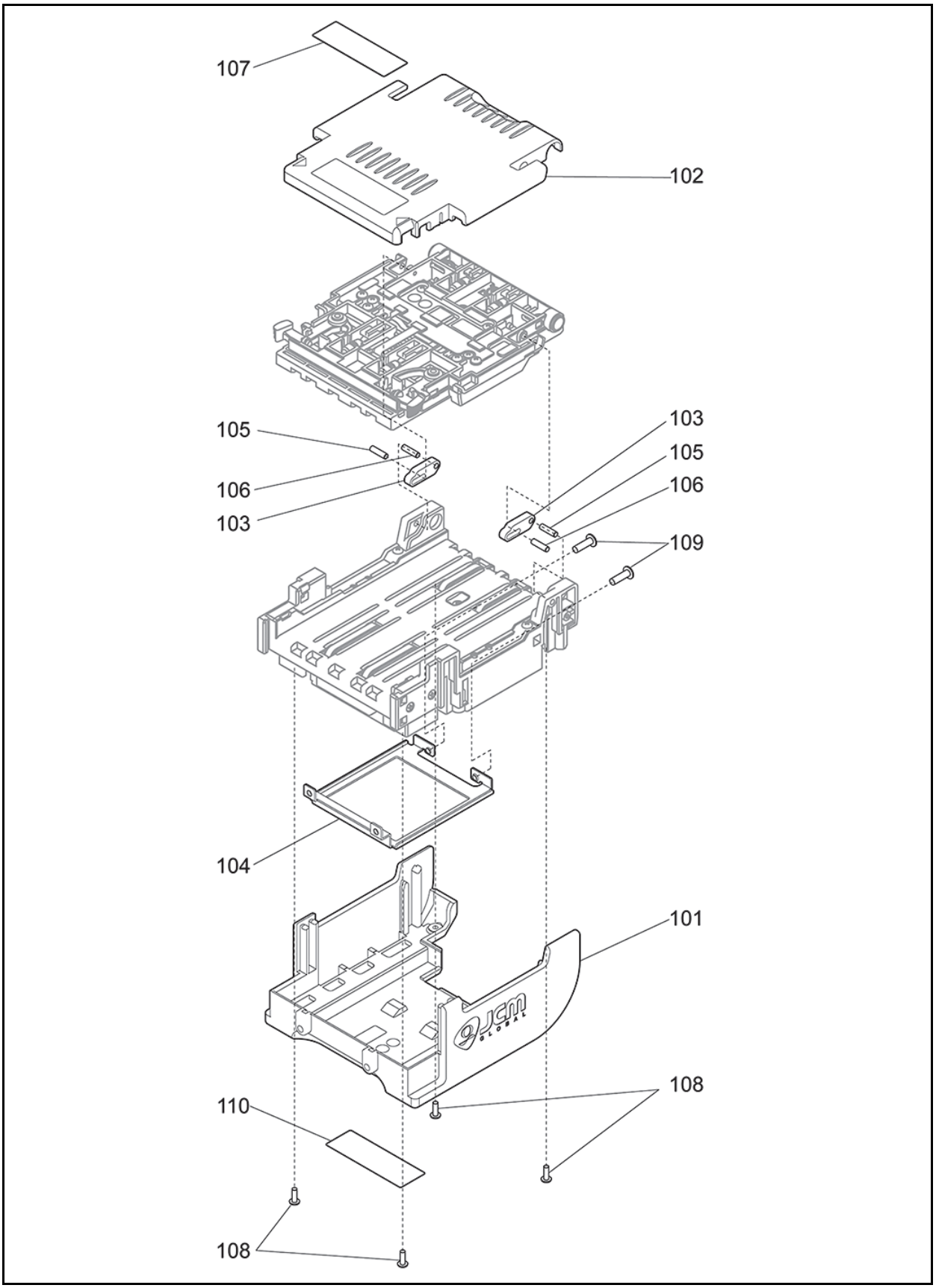

Figure 7-2 iVIZION Validation Unit 1 Exploded View

iVIZION Validation Unit 1 Parts List

Table 7-2 iVIZION Validation Unit 1 Parts List

Ref No.	EDP No.	Description	Qty	Remark
101	147804	iVIZION Head Cover A	1	
102	147805	iVIZION Head Cover B	1	
103	147828	Head Open Stopper	2	
104	147768	Grounding Plate A	1	
105	147972	Stopper Fulcrum Pin	2	
106	147973	Stopper Pin	2	
107	151783	iVIZION Sticker	1	
108	056165	2.6×8 Phillips, Self Tightening, Binding 3M Screw	4	
109	045969	M2.6×10 Pan Head Screw with W Washer 3M	2	
110	187255	Validation Serial Label	1	

iVIZION Validation Unit 2 Exploded View

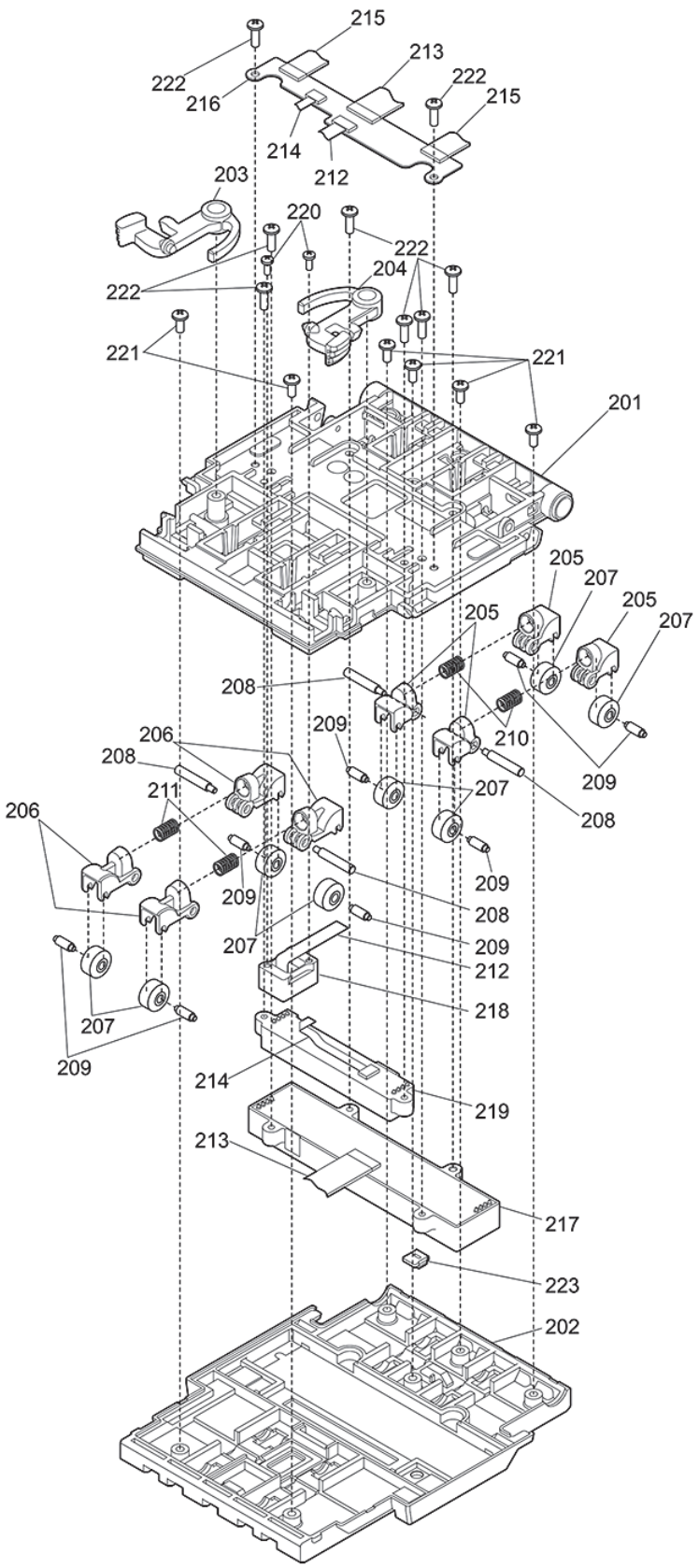

Figure 7-3 iVIZION Validation Unit 2 Exploded View

iVIZION Validation Unit 2 Parts List

Table 7-3 iVIZION Validation Unit 2 Parts List

Ref No.	EDP No.	Description	Qty	Remark
201	147803	iVIZION Head Frame B	1	
202	147807	iVIZION Head Bill Guide 85B	1	
203	147813	Head Open Latch A	1	
204	147823	Head Open Latch B	1	
205	147826	Roller Arm Front	4	
206	147827	Roller Arm Rear	4	
207	147929	iVIZION Head Roller	8	
208	147969	Roller Arm Shaft	4	
209	147970	Head Roller Shaft	8	
210	147734	Spring Arm Rear	2	
211	147746	Spring Arm Front	2	
212	142633	Upper UV FPC	1	
213	142635	Upper CIS FFC	1	
214	146755	Transmissive Light FFC	1	
215	146757	Validation Sensor FPC	2	
216	148057	Sensor Relay Board Assy	1	
217	146788	CIS	1	
218	146786	Upper UV Sensor	1	
219	146790	Transmissive Light	1	
220	149786	2×5 Phillips Strict, Self Tightening, Binding 3M Screw (Black)	2	
221	104010	2.6×6 Phillips, Self Tightening, Binding 3M Screw	6	
222	106002	2.6×8 Phillips, Self Tightening, Binding 3M Screw (Black)	8	
223	151781	CIS Partner	1	

iVIZION Validation Unit 3 Exploded View

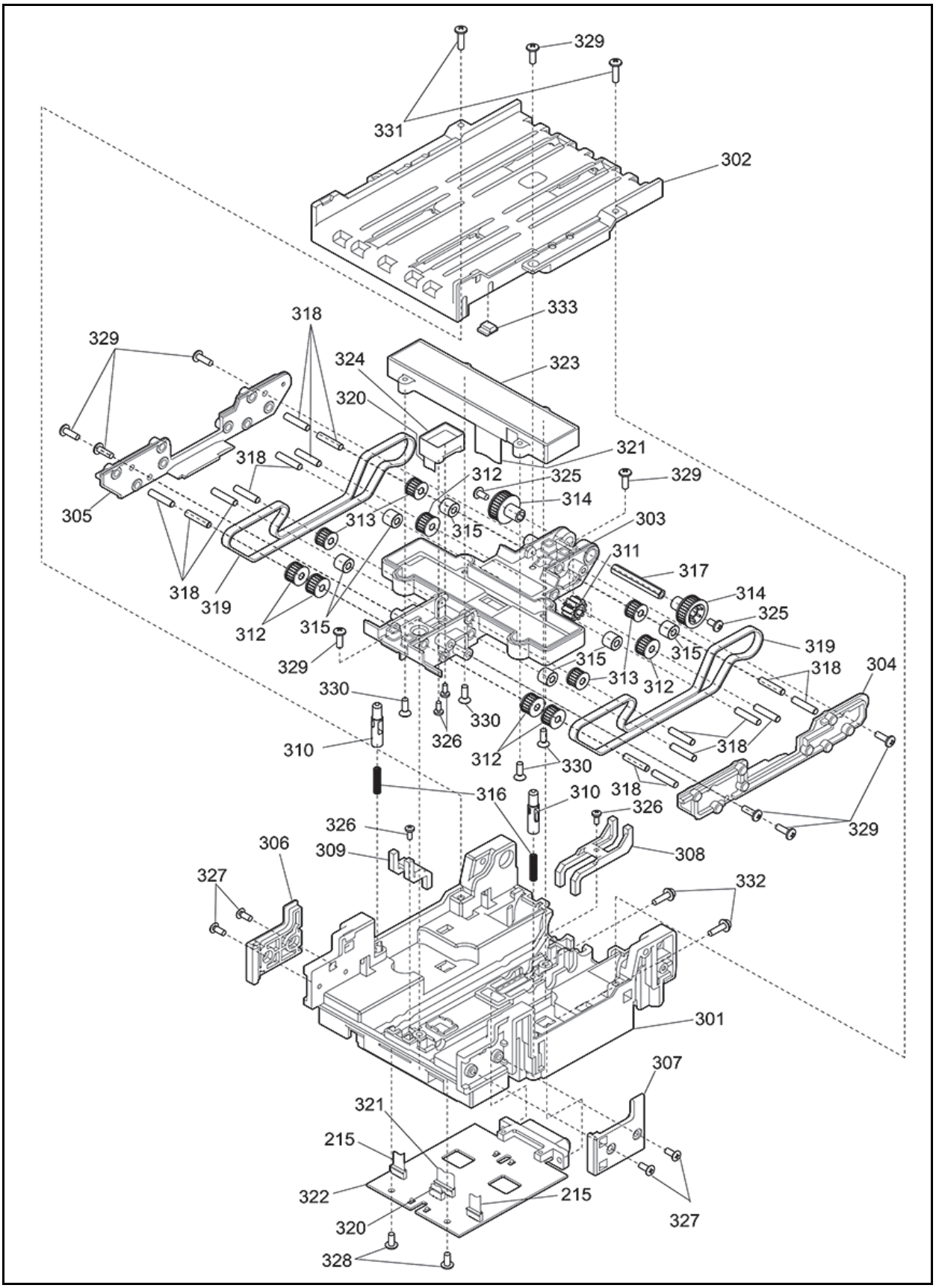

Figure 7-4 iVIZION Validation Unit 3 Exploded View

iVIZION Validation Unit 3 Parts List

Table 7-4 iVIZION Validation Unit 3 Parts List

Ref No.	EDP No.	Description	Qty	Remark
301	147802	iVIZION Head Frame A	1	
302	147806	iVIZION Head Bill Guide 85A	1	
303	147808	Head Drive Frame	1	
304	147809	Head D-Frame Cover A	1	
305	147810	Head D-Frame Cover B	1	
306	147811	Bezel Hold Chips A	1	
307	147812	Bezel Hold Chips B	1	
308	147824	Exit Sensor Prism	1	
309	147825	Entrance Prism	1	
310	147829	Bill Guide Push Pin	2	
311	147914	Head Drive Gear	1	
312	147923	Pulley Head Idler 1	6	
313	147924	Pulley Head Idler 2	4	
314	147925	Pulley Head Drive	2	
315	147930	iVIZION Head Roller 2	6	
316	147747	Spring Bill Guide Push Pin	2	
317	147968	Head Drive Shaft	1	
318	147971	Head Pulley Pin	16	
319	148034	Timing Belt (Eco Specifications)	2	
320	146761	Lower UV FFC	1	
321	146764	Lower CIS FFC	1	
322	189839	Validation Sensor Board Assy	1	
323	146788	CIS	1	
324	146787	Lower UV Sensor	1	
325	148574	M2.6×5 Phillips, F-Lock Binding 3M Screw	2	
326	149786	2×5 Phillips Strict, Self Tightening, Binding 3M Screw (Black)	4	
327	149787	2.6×6 Phillips Strict, Self Tightening, Laminate M3 Screw II (TORX)	4	
328	104010	2.6×6 Phillips, Self Tightening, Binding 3M Screw	2	
329	106002	2.6×8 Phillips, Self Tightening, Binding 3M Screw (Black)	9	
330	101782	M2.6×8 Flathead, Phillips, Self Tightening 3M Screw	4	
331	104012	2.6x10 Phillips, Self Tightening 3M Screw (Blue)	2	
332	045969	2.6×10 Pan Head Screw with W Washer 3M	2	
333	151781	CIS Partner	1	

iVIZION Transport Unit 1 Exploded View

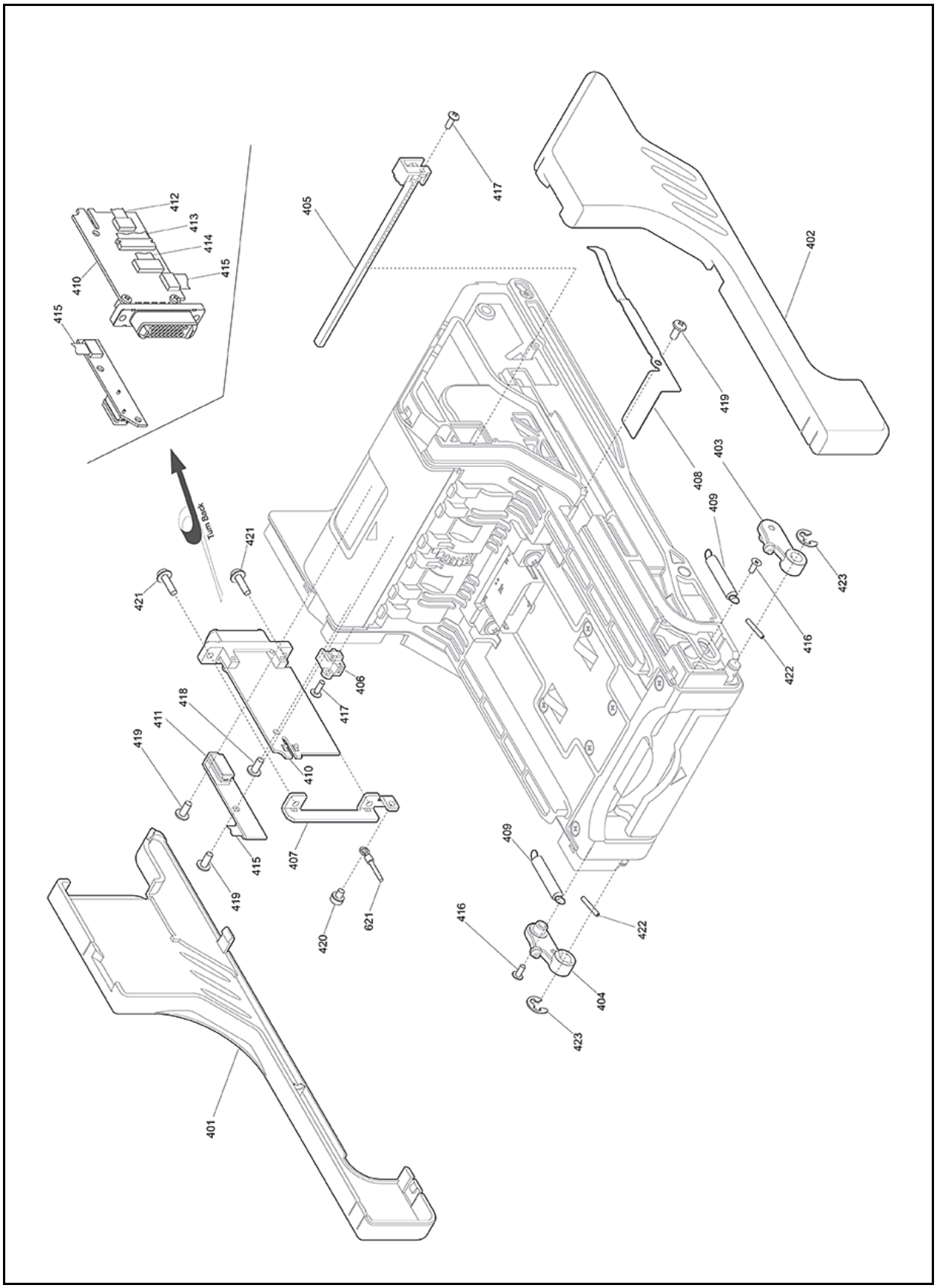

Figure 7-5 iVIZION Transport Unit 1 Exploded View

iVIZION Transport Unit 1 Parts List

Table 7-5 iVIZION Transport Unit 1 Parts List

Ref No.	EDP No.	Description	Qty	Remark
401	147831	Transport Side Cover A	1	
402	147832	Transport Side Cover B	1	
403	147841	Transport Removal Arm A	1	
404	147842	Transport Removal Arm B	1	
405	147850	Side Sensor Cover	1	
406	147851	Side Sensor Prism	1	
407	147771	Connector Plate	1	
408	147772	Transport GND Plate	1	
409	147988	Spring Transport Latch	2	
410	190326	Interface Connector Board Assy	1	
411	148059	Home Position Sensor Board Assy	1	
412	142636	USB FPC	1	
413	146754	Power Supply FPC	1	
414	146805	Interface FPC	1	
415	146810	Home Position Sensor FFC	1	
416	149788	2×5 Phillips, Self Tightening, Binding 3M Screw	2	
417	148572	2×6 Phillips, Self Tightening, Truss Head 3M Screw	2	
418	082040	2.6×6 Phillips, Self Tightening, Pan Head 3M Screw	1	
419	104010	2.6×6 Phillips, Self Tightening, Binding 3M Screw	3	
420	023755	M2.6×4 Pan Head Screw with W Washer 3M	1	
421	045969	M2.6×10 Pan Head Screw with W Washer 3M	2	
422	137787	Φ1.6×10 Parallel Pin Sustainer (Hard)	2	
423	104036	Φ4 E-Ring	2	

iVIZION Transport Unit 2 Exploded View

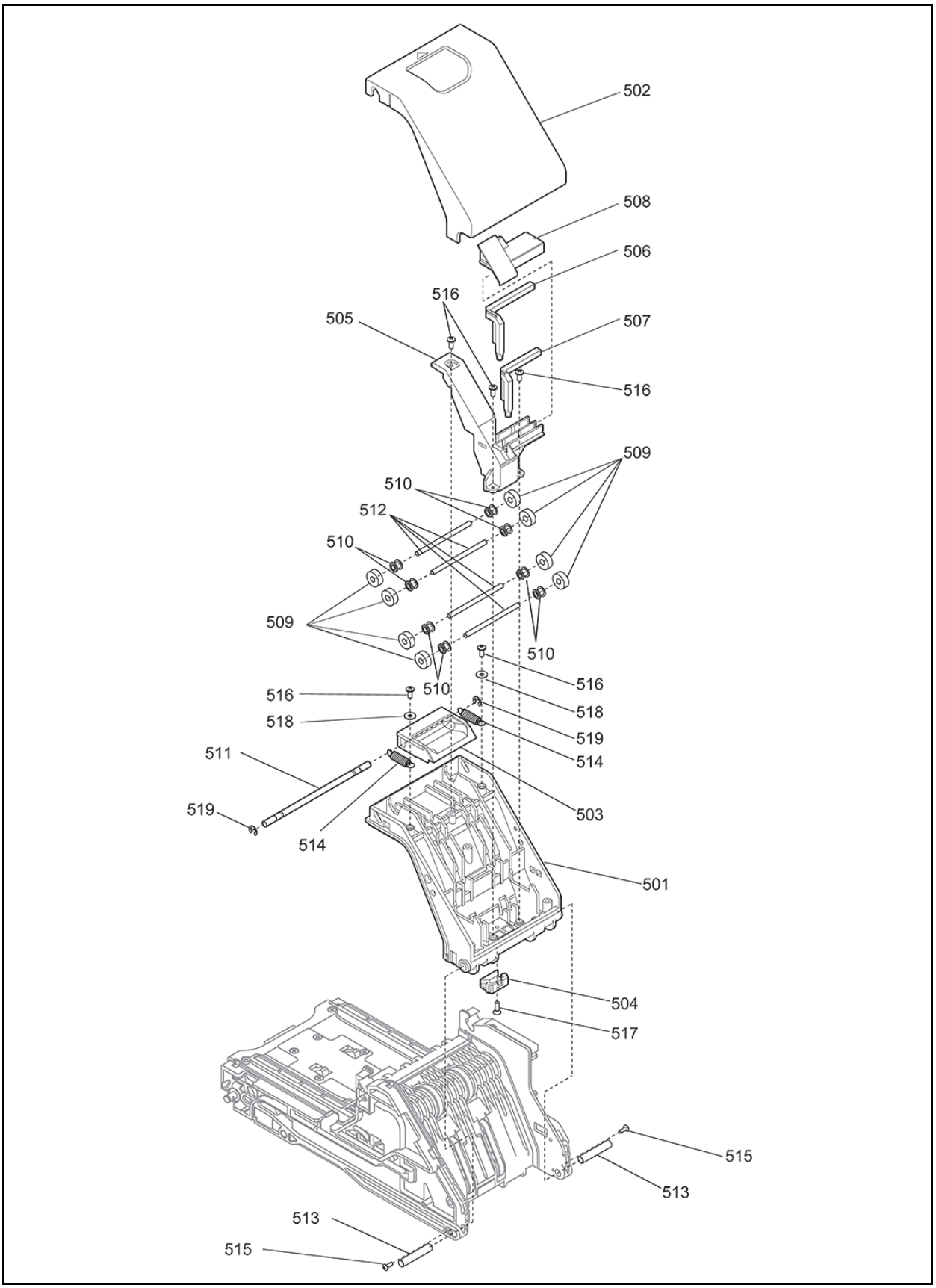

Figure 7-6 iVIZION Transport Unit 2 Exploded View

iVIZION Transport Unit 2 Parts List

Table 7-6 iVIZION Transport Unit 2 Parts List

Ref No.	EDP No.	Description	Qty	Remark
501	147833	Transport UP Frame	1	
502	147834	Transport UP-Bill Guide Cover	1	
503	147843	Bill Guide Open-Close Lever	1	
504	147847	Transport Light Guide D	1	
505	147881	Fixer Roller Shaft	1	
506	147882	Transport Light Guide F	1	
507	147883	Transport Light Guide G	1	
508	147887	Cover Prism Home Position	1	
509	147767	Sponge Roller	8	
510	147966	Transport Roller Core	8	
511	147976	Bill Guide Open-Close Shaft	1	
512	147984	UP-Bill Guide Roller Shaft	4	
513	147985	Bill Guide Fulcrum Pin	2	
514	147987	Spring Bill Guide Open-Close	2	
515	148572	2×6 Phillips, Self Tightening, Truss Head 3M Screw	2	
516	104010	2.6×6 Phillips, Self Tightening, Binding 3M Screw	5	
517	052564	2.6×6 Flathead, Phillips, Self Tightening 3M Screw	1	
518	000666	Φ2.6×7.5×0.5 Plain Washer	2	
519	104035	Φ3 E-Ring	2	

iVIZION Transport Unit 3 Exploded View

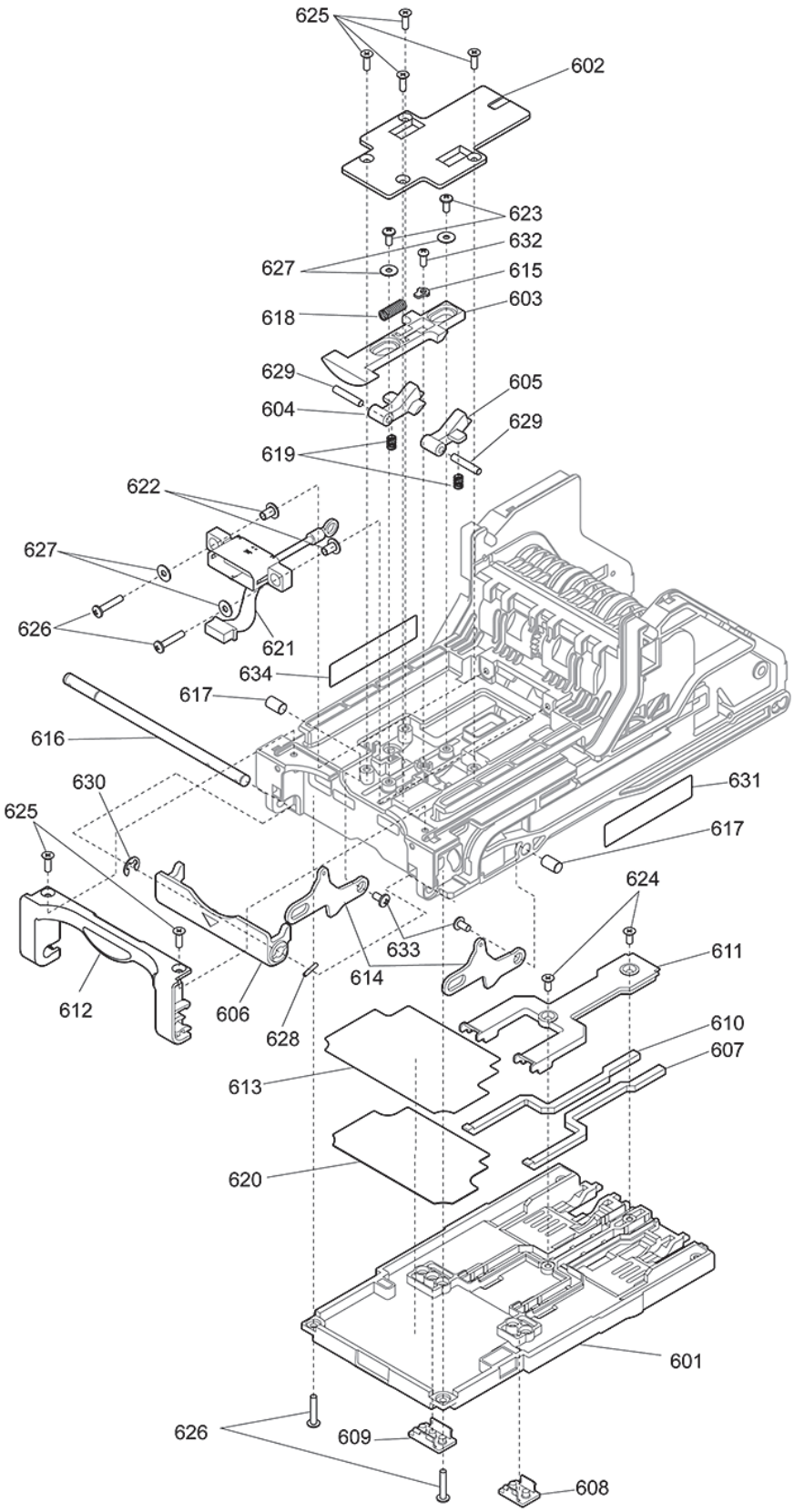

Figure 7-7 iVIZION Transport Unit 3 Exploded View

iVIZION Transport Unit 3 Parts List

Table 7-7 iVIZION Transport Unit 3 Parts List

Ref No.	EDP No.	Description	Qty	Remark
601	147835	Transport Bottom Cover	1	
602	147836	Head Latch Cover	1	
603	147837	Head Latch Button	1	
604	147838	Head Removal Latch A	1	
605	147839	Head Removal Latch B	1	
606	147840	Transport Removal Lever	1	
607	147844	Transport Light Guide A	1	
608	147845	Transport Light Guide B	1	
609	147846	Transport Light Guide C	1	
610	147890	Transport Light Guide H	1	
611	147893	Prism Cover Feed Out Sensor	1	
612	147897	Front Mask Transport	1	
613	187258	UC Insulating Sheet	1	
614	147770	Transport Removal Latch	2	
615	147773	Fixer Head Latch Spring	1	
616	147974	Head Removal Shaft	1	
617	147986	Transport Unit Latch Fulcrum Pin	2	
618	147748	Spring Head Button	1	
619	147749	Spring Head Latch	2	
620	187256	Noise Shielding Sticker	1	
621	147158	Validation Unit Harness	1	
622	148610	Floating Collar	2	
623	104010	2.6×6 Phillips, Self Tightening, Binding 3M Screw	2	
624	052564	2.6×6 Flathead, Phillips, Self Tightening 3M Screw	2	
625	110949	2.6×8 Flathead, Phillips, Self Tightening 3M Screw (Black)	6	
626	148573	2.6×14 Phillips, Self Tightening, Binding 3M Screw (Black)	4	
627	000666	Φ2.6×7.5×0.5 Plain Washer	4	
628	104020	Φ1.6×8 Parallel Pin Sustainer (Hard)	1	
629	109658	Φ3×16 Parallel Pin Sustainer (Hard)	2	
630	104035	Φ3 E-Ring	1	
631	187257	Transport Serial Label	1	
632	082040	2.6×6 Phillips, Self Tightening, Pan Head 3M Screw	1	
633	192747	2 x 5 Ramimate 3M Screwwith Lock	2	
634	Pending	Bar Code Label	1	

iVIZION Transport Unit 4 Exploded View

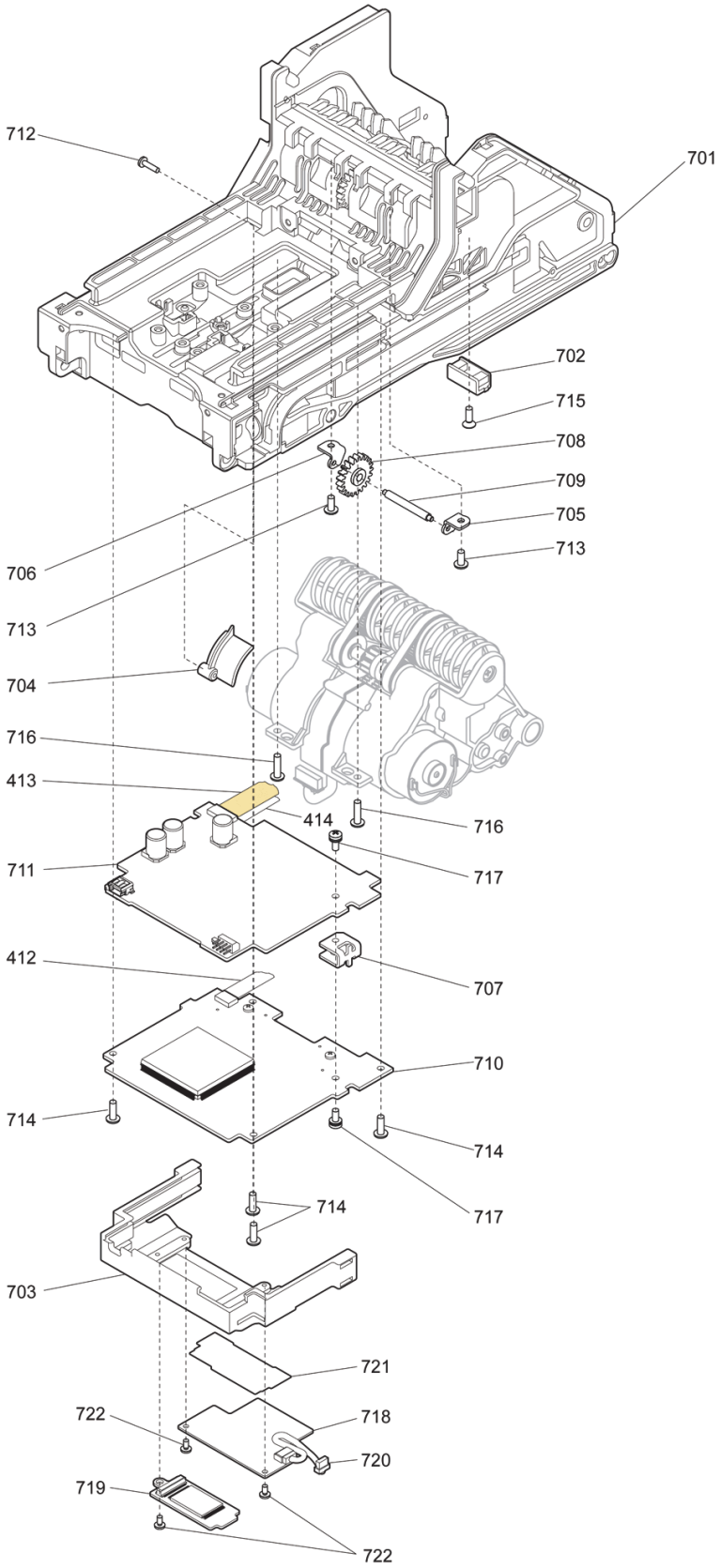

Figure 7-8 iVIZION Transport Unit 4 Exploded View

iVIZION Transport Unit 4 Parts List

Table 7-8 iVIZION Transport Unit 4 Parts List

Ref No.	EDP No.	Description	Qty	Remark
701	147830	Transport Main Frame	1	
702	147849	Transport Light Guide E	1	
703	147885	PCB Supporter	1	
704	147895	FPC Cover	1	
705	147774	Fixer Gear Shaft A	1	
706	147775	Fixer Gear Shaft B	1	
707	185199	SG Plate	1	
708	147764	Gear Head Connection 2	1	
709	147979	Head Connection Shaft 2	1	
710	189835	Validation CPU Board Assy	1	
711	189830	Control CPU Board Assy	1	
712	098267	2×8 Phillips, Self Tightening, Binding 3M Screw (Black)	1	
713	104010	2.6×6 Phillips, Self Tightening, Binding 3M Screw	2	
714	106002	2.6×8 Phillips, Self Tightening, Binding 3M Screw (Black)	4	
715	101782	2.6×8 Flathead, Phillips, Self Tightening 3M Screw	1	
716	104012	2.6×10 Phillips, Self Tightening, Binding 3M Screw (Blue)	2	
717	124663	M2.6×6 Pan Head Screw with W Washer 3M	2	
718	146783	RFID Module	1	
719	140963	Extended Memory Board Assy 64M bit (total 128M bit)	1	
	Pending	Extended Memory Board Assy 128M bit (total 192M bit)	1	
720	146816	RFID Harness	1	
721	185749	RFID Insulating Sheet	1	
722	076466	2×4 Phillips, Self Tightening, Binding 3M Screw	3	

iVIZION Transport Unit 5 Exploded View

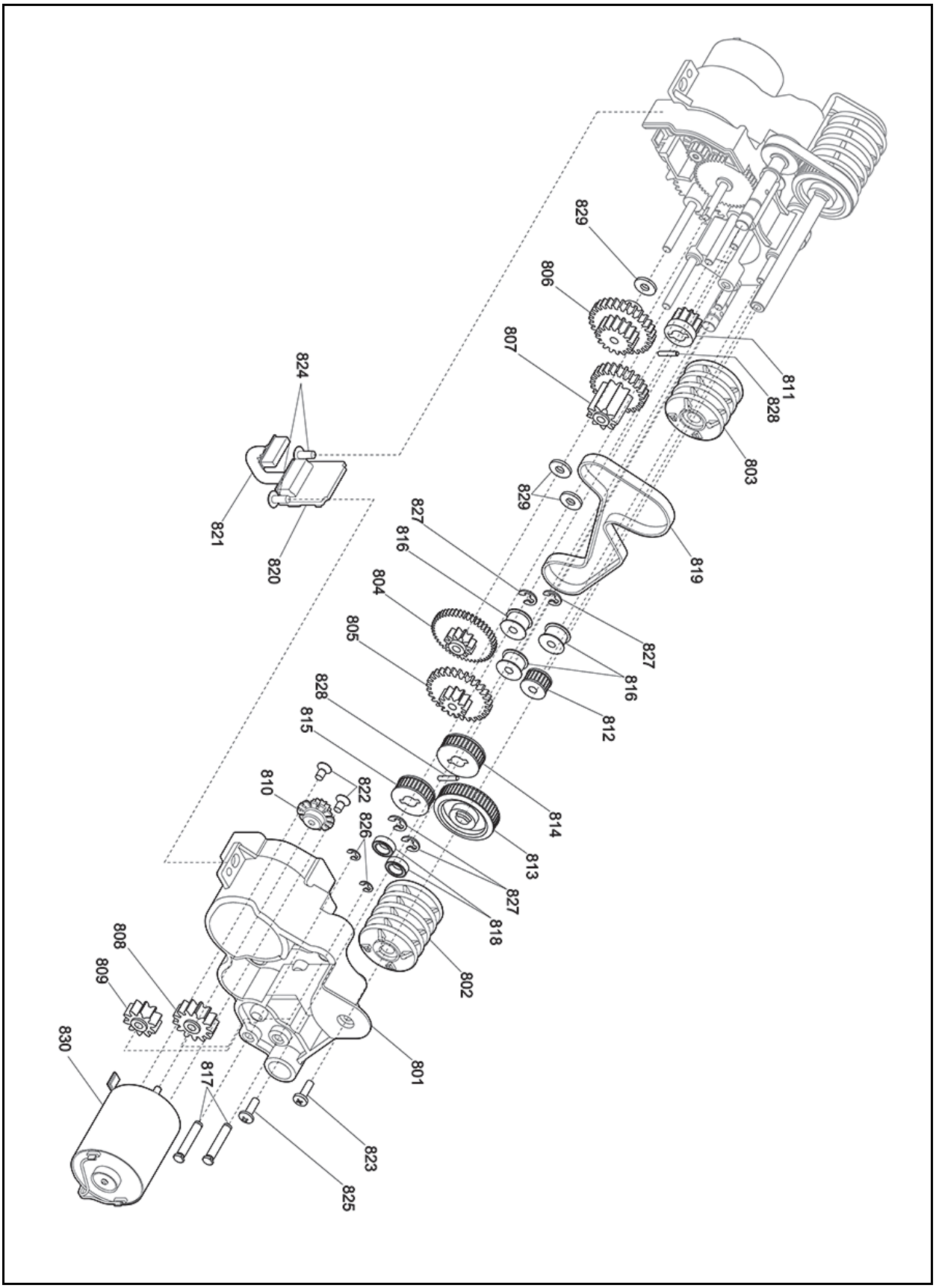

Figure 7-9 iVIZION Transport Unit 5 Exploded View

iVIZION Transport Unit 5 Parts List

Table 7-9 iVIZION Transport Unit 5 Parts List

Ref No.	EDP No.	Description	Qty	Remark
801	147852	Drive Module Frame A	1	
802	147879	iVIZION Reel A	1	
803	147880	iVIZION Reel B	1	
804	147752	Gear Stack 2	1	
805	147753	Gear Stack 3	1	
806	147754	Gear Stack 4	1	
807	147755	Gear Transport-Stacking 1	1	
808	147756	Gear Transport-Stacking 2	1	
809	147757	Gear Box Connection	1	
810	147759	Gear Transport-Stacking Motor	1	
811	147763	Gear Head Connection 1	1	
812	147923	Pulley Head Idler 1	1	
813	147799	Pulley Reel	1	
814	147800	Pulley Transport Drive	1	
815	147801	Pulley Head Connection	1	
816	147967	Pulley Idler 2	3	
817	147980	Outside Gear Shaft	2	
818	148032	Bearing	2	
819	148035	Timing Belt (Eco Specification)	1	
820	148058	Interrupter Board Assy	1	
821	146782	Interrupter Harness	1	
822	081564	M2.6×5 Flathead, Phillips, F-Lock 3M Screw	2	
823	104007	M2.6×8 Phillips, F-Lock Binding 3M Screw (Blue)	1	
824	148572	2.6×6 Phillips, Self Tightening, Truss Head 3M Screw	2	
825	106002	2.6×8 Phillips, Self Tightening, Binding 3M Screw (Black)	1	
826	091517	Φ2 E-Ring	2	
827	104035	Φ3 E-Ring	4	
828	104020	Φ1.6x8 Parallel Pin Sustainer (Hard)	2	
829	148030	Φ3.1x6x1.0 Poly Vinyl Slider	3	
830	148672	Motor Assy	1	

iVIZION Transport Unit 6 Exploded View

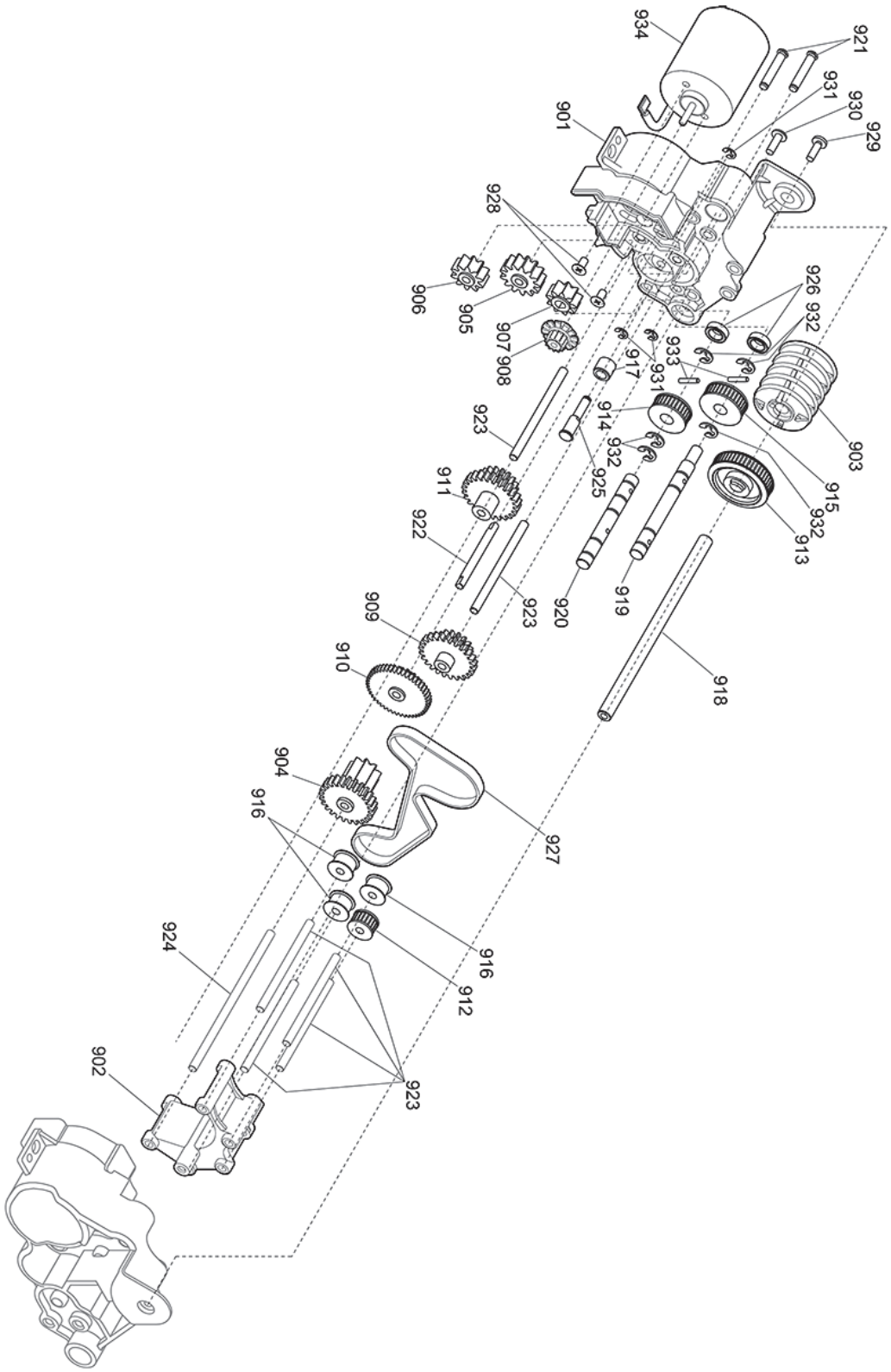

Figure 7-10 iVIZION Transport Unit 6 Exploded View

iVIZION Transport Unit 6 Parts List

Table 7-10 iVIZION Transport Unit 6 Parts List

Ref No.	EDP No.	Description	Qty	Remark
901	147853	Drive Module Frame B	1	
902	147854	Transport Gear Stabilizer	1	
903	147879	iVIZION Reel A	1	
904	147755	Gear Transport-Stacking 1	1	
905	147756	Gear Transport-Stacking 2	1	
906	147757	Gear Box Connection	1	
907	147758	Gear Pulley Drive	1	
908	147759	Gear Transport-Stacking Motor	1	
909	147760	Gear Transport 2	1	
910	147761	Gear Transport 3	1	
911	147762	Gear Transport 4	1	
912	147923	Pulley Head Idler 1	1	
913	147799	Pulley Reel	1	
914	147800	Pulley Transport Drive	1	
915	147801	Pulley Head Connection	1	
916	147967	Pulley Idler2	3	
917	185195	Roller Belt Stopper	1	
918	147975	Reel Shaft	1	
919	147977	Transport Drive Shaft	1	
920	147978	Head Connection Shaft 1	1	
921	147980	Outside Gear Shaft	2	
922	147981	Gear Module Shaft 1	1	
923	147982	Gear Module Shaft 2	6	
924	147983	Gear Module Shaft 3	1	
925	185200	Belt Stopper Roller Pin	1	
926	148032	Bearing	2	
927	148035	Timing Belt (Eco Specifications)	1	
928	081564	M2.6×5 Flathead, Phillips, F-Lock 3M Screw	2	
929	104007	M2.6×8 Phillips, F-Lock Binding 3M Screw (Blue)	1	
930	106002	2.6×8 Phillips, Self Tightening, Binding 3M Screw (Black)	1	
931	091517	Φ2 E-Ring	3	
932	104035	Φ3 E-Ring	5	
933	104020	Φ1.6×8 Parallel Pin Sustainer (Hard)	2	
934	148672	Motor Assy	1	

iVIZION SS Version Frame Unit Exploded View

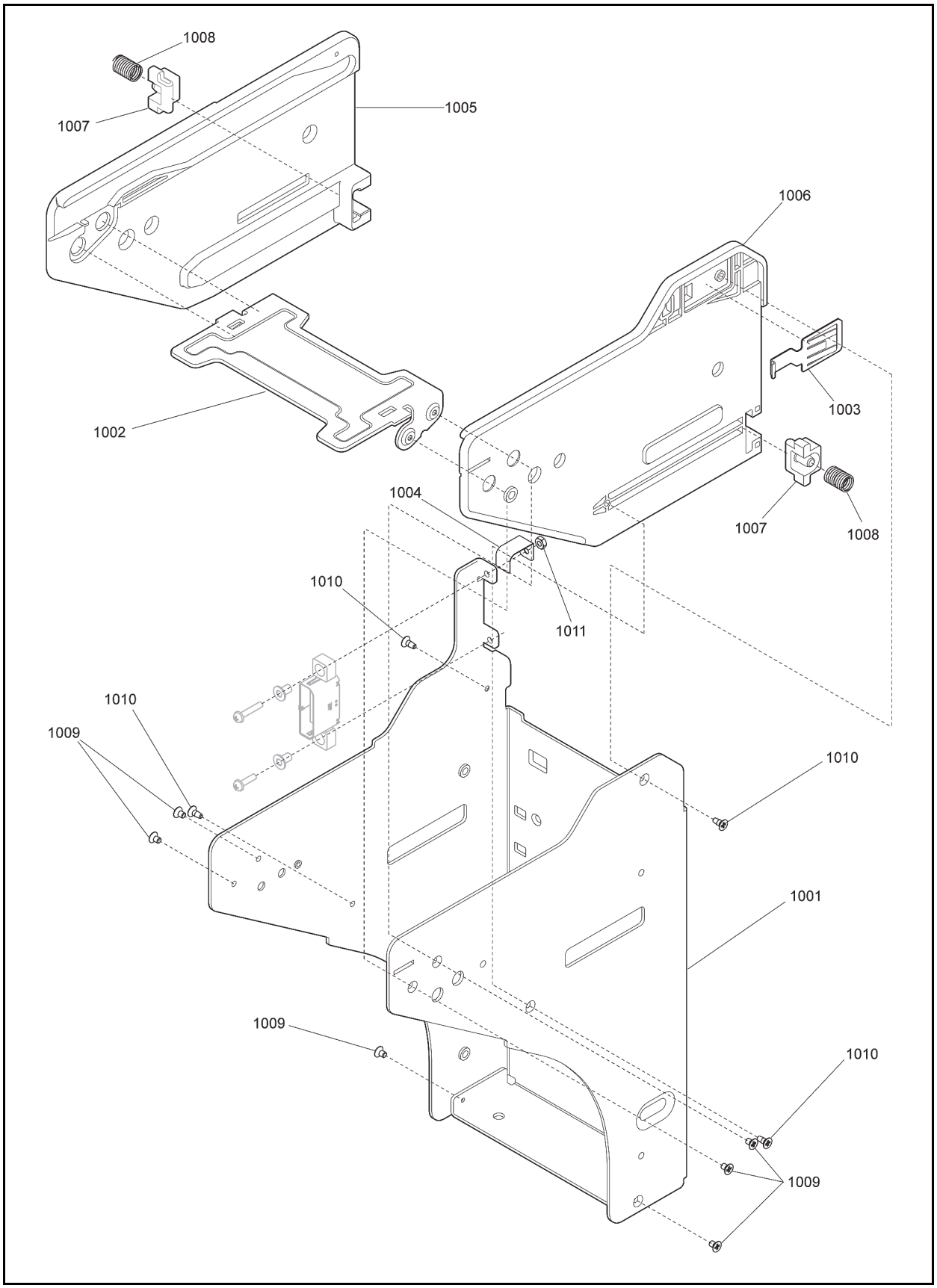

Figure 7-11 iVIZION SS Version Frame Unit Exploded View

iVIZION SS Version Frame Unit Parts List

Table 7-11 iVIZION SS Version Frame Unit Parts List

Ref No.	EDP No.	Description	Qty	Remark
1001	147777	Frame Base	1	
1002	147778	Frame Base Guide	1	
1003	147793	Frame Spring Plate	1	
1004	151784	Frame FG Plate	1	
1005	147904	Frame Guide L	1	
1006	147905	Frame Guide R	1	
1007	147906	Frame Latch	2	
1008	147750	Frame Compression Spring 01	2	
1009	006021	M2.6×4 Flathead, Phillips, 3M Screw	6	
1010	148186	2.6×6 Flathead, Phillips, Self Tightening, 3M Screw	4	
1011	149426	M2.6 Nylon Nut	1	

iVIZION Cash Box Unit 1 Exploded View

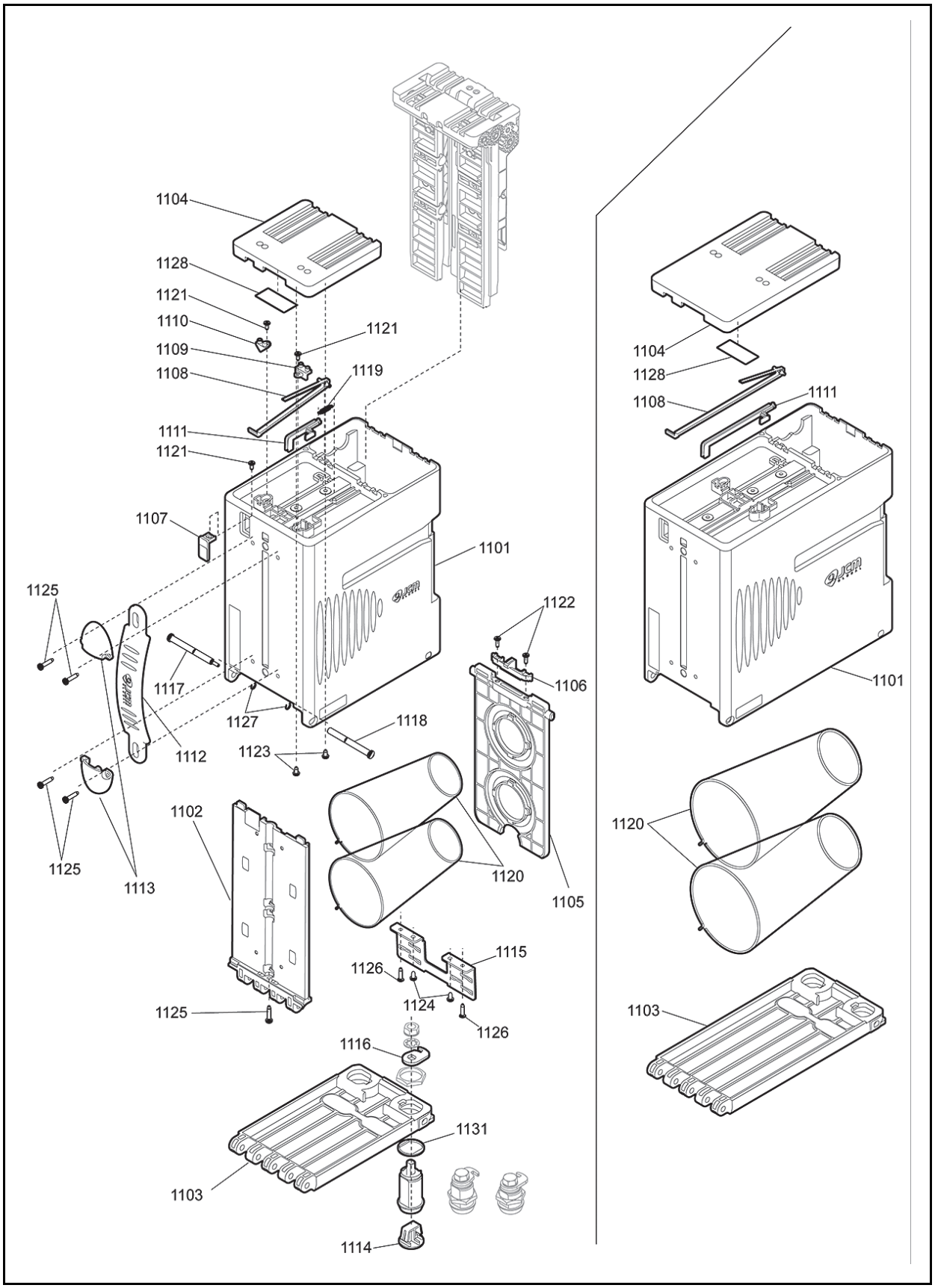

Figure 7-12 iVIZION Cash Box Unit 1 Exploded View

iVIZION Cash Box Unit 1 Parts List

Table 7-12 iVIZION Cash Box Unit 1 Parts List

Ref No.	EDP No.	Description	Qty	Remark
1101	147907	Box (S)	1	
	148781	Box (L)		
1102	147908	Box Base	1	
1103	147909	Box Door (S)	1	
	148782	Box Door (L)		
1104	147910	Box Cover (S)	1	
	148783	Box Cover (L)		
1105	147911	Presser Plate	1	
1106	147912	Plate Stopper	1	
1107	147941	Indicator Window	1	
1108	147942	Indicator Arm (S)	1	
	148785	Indicator Arm (L)		
1109	147943	Box Prism (Near-Full)	1	
1110	147944	Box Prism (State)	1	
1111	147945	Lever Nearly Full (S)	1	
	148784	Lever Nearly Full (L)		
1112	147946	Handle	1	
1113	147947	Handle Cover	2	
1114	148472	Key Cover	1	
1115	147794	Lock Bracket	1	
1116	147795	Lock Plate	2	
1117	147934	Box Shaft (1)	1	
1118	147935	Box Shaft (2)	1	
1119	147990	Home Position Lever Spring	1	
1120	114526	Cash Stock Spring	2	
	127714	IQ P-Box Spring		
1121	104418	2.6x6 Phillips, Self Tightening, Binding 3M Screw (Black)	3	
1122	056165	2.6x8 Phillips, Self Tightening, Binding 3M Screw	2	
1123	187735	3x6 Pan NONSERT Head Screw	2	
1124	060794	3x12 Flathead, Phillips, Self Tightening 3M Screw	2	
1125	185201	3x14 Phillips, Self Tightening, Pan Head 3M Screw (Black)	5	
1126	006037	M3 x 12 Pan Head Screw with W Washer 3M	2	
1127	003718	Crescent Snap Ring	2	
1128	146785	RFID Tag	1	
1129	192745	Indicator Cover (S)	1	
	192746	Indicator Cover (L)	1	
1130	140958	2.6x5 Ramimate 3M Screw	5	
			9	
1131	059086	Key Spacer	1	

iVIZION Cash Box Unit 2 Exploded View

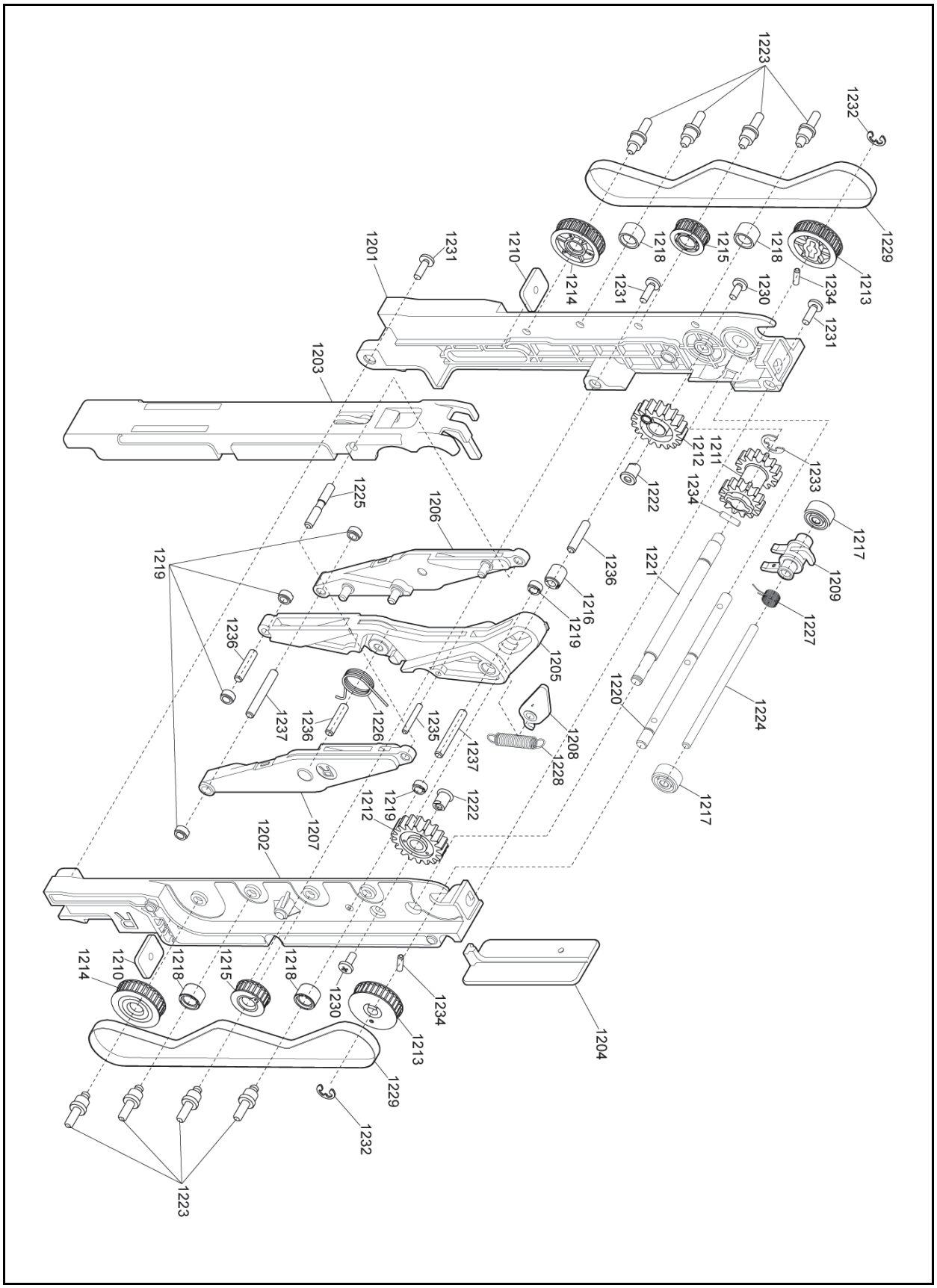

Figure 7-13 iVIZION Cash Box Unit 2 Exploded View

iVIZION Cash Box Unit 2 Parts List

Table 7-13 iVIZION Cash Box Unit 2 Parts List

Ref No.	EDP No.	Description	Qty	Remark
1201	147953	Frame Inner L	1	
1202	147954	Frame Inner R	1	
1203	147955	Arm Pusher	1	
1204	147956	Arm Slide Lever	1	
1205	147958	Arm Center	1	
1206	147959	Arm Left	1	
1207	147960	Arm Right	1	
1208	147961	Home Position Lever	1	
1209	147963	Stack Guide	1	
1210	147796	Plate Nut	2	
1211	147918	Arm Drive Gear	1	
1212	147919	Arm Link Gear	2	
1213	147926	Feed Drive Pulley	2	
1214	147927	Feed Driven Pulley	2	
1215	147928	Feed Idol Pulley	2	
1216	147931	Link Roller	1	
1217	147932	Feed Roller	2	
1218	147933	Feed Idol Roller	4	
1219	185197	Arm Slide Roller	6	
1220	147937	Feed Shaft	1	
1221	147938	Stack Shaft	1	
1222	147939	Arm Link Shaft	2	
1223	147821	Feed Pulley Shaft	8	
1224	147940	Pin 0360	1	
1225	147822	Arm Link Pin	1	
1226	147765	Arm Spring	1	
1227	147766	Stack Guide Spring	1	
1228	147990	Home Position Lever Spring	1	
1229	148033	Timing Belt (Eco Specifications)	2	
1230	003598	M2.6×6 Pan Head Screw with Washer 3M	2	
1231	056165	2.6×8 Phillips, Self Tightening Binding 3M Screw	3	
1232	104035	Φ3 E-Ring	2	
1233	104036	Φ4 E-Ring	1	
1234	104027	Φ2x8 Parallel Pin Sustainer	3	
1235	064863	Φ2x14 Parallel Pin Sustainer	1	
1236	066091	Φ3x14 Parallel Pin Sustainer	3	
1237	061317	Φ3x22 Parallel Pin Sustainer	2	

iVIZION Cash Box Unit 3 Exploded View

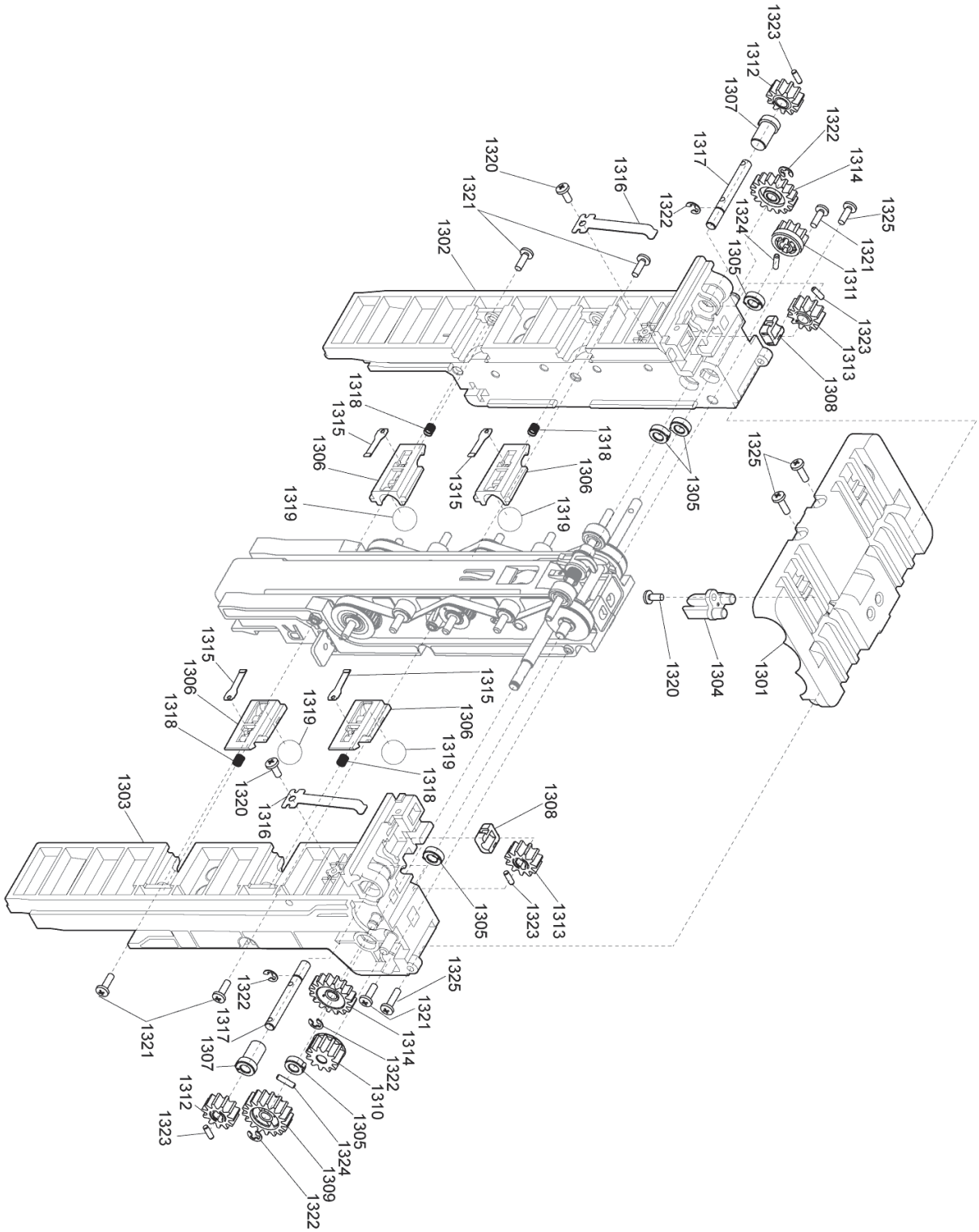

Figure 7-14 iVIZION Cash Box Unit 3 Exploded View

iVIZION Cash Box Unit 3 Parts List

Table 7-14 iVIZION Cash Box Unit 3 Parts List

Ref No.	EDP No.	Description	Qty	Remark
1301	147950	Unit Cover	1	
1302	147951	Frame Outer L	1	
1303	147952	Frame Outer R	1	
1304	147957	Home Position Prism	1	
1305	147962	Bearing 0804	5	
1306	147964	Ball Guide Spring	4	
1307	148536	Bearing Connect	2	
1308	185198	Frame Bush	2	
1309	147915	Stack Gear	1	
1310	147916	Stack Idol Gear	1	
1311	147917	Feed Gear	1	
1312	147920	Drive Gear	2	
1313	147921	Connect Gear Shaft	2	
1314	185196	Idol Gear	2	
1315	147797	Ball Spring	4	
1316	147798	Feed Roller Spring	2	
1317	147936	Connect Gear Shaft	2	
1318	147751	Ball Guide Spring	4	
1319	148029	Poly Acetal Ball 3/8 inch High Level	4	
1320	104418	2.6x6 Phillips, Self Tightening, Binding 3M Screw (Black)	3	
1321	056165	2.6x8 Phillips, Self Tightening, Binding 3M Screw	6	
1322	003706	Φ2.5 E-Ring	5	
1323	104288	Φ2x6 Parallel Pin Sustainer	4	
1324	104027	Φ2x8 Parallel Pin Sustainer	2	
1325	063302	2.6x10 Phillips, Self Tightening, Binding 3M Screw (Black)	4	

iVIZION LD Version Frame Exploded View

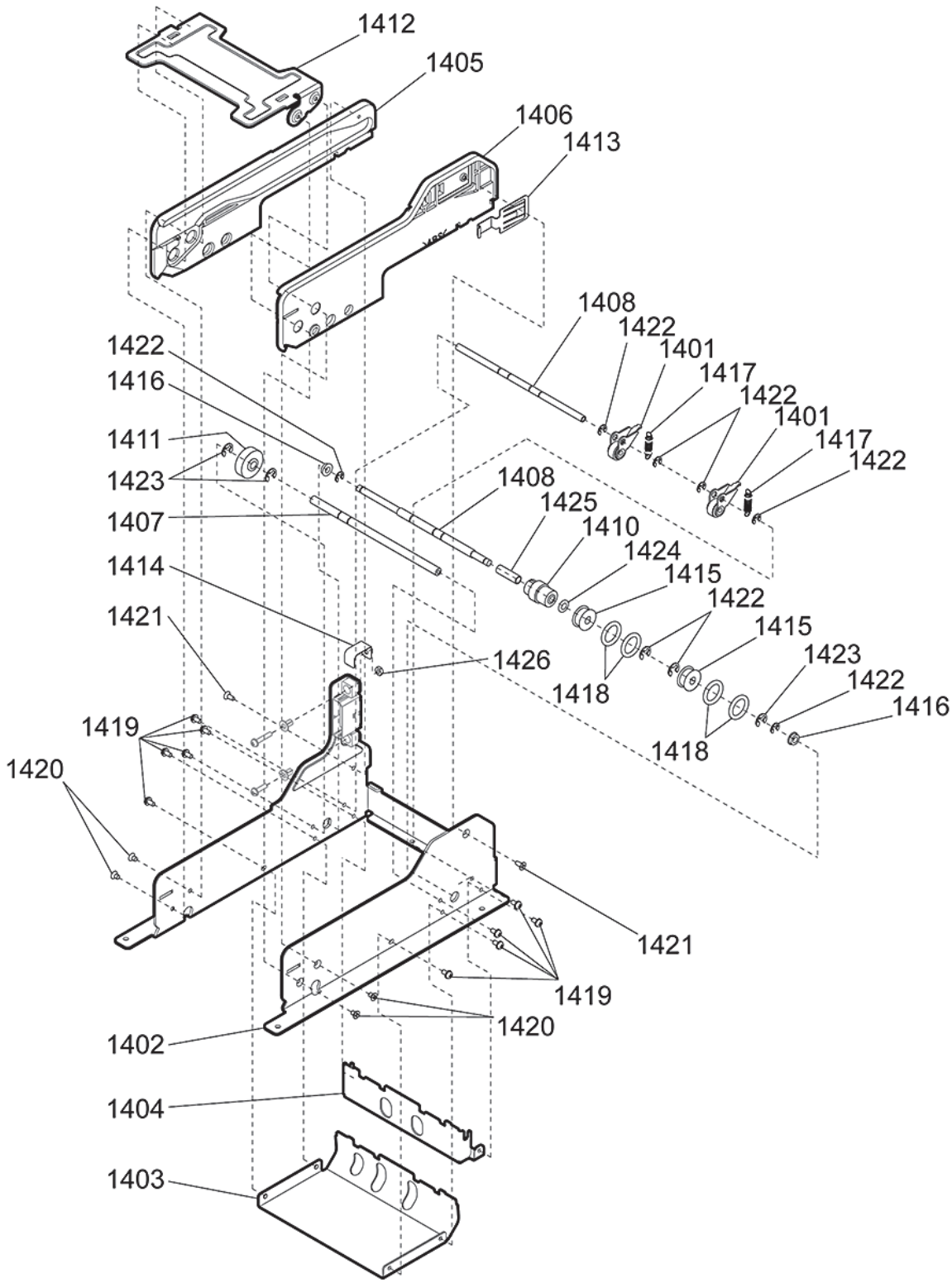

Figure 7-15 iVIZION LD Version Frame Exploded View

iVIZION LD Version Frame Parts List

Table 7-15 iVIZION LD Version Frame Parts List

Ref No.	EDP No.	Description	Qty	Remark
1401	206386	LD Roller Arm Assy.	2	
1402	206378	LD Frame Base	1	
1403	206377	LD Banknote Front Guide	1	
1404	206376	LD Banknote Rear Guide	1	
1405	206379	LD Frame Guide Left	1	
1406	206380	LD Frame Guide Right	1	
1407	206381	LD Idler Beam	1	
1408	206382	LD Roller Arm Beam	1	
1409	206383	LD Roller Shaft	1	
1410	206384	LD One Way Gear	1	
1411	206385	LD Idler Gear	1	
1412	147778	Frame Base Guide	1	
1413	147793	Frame Spring Plate	1	
1414	151784	Frame Ground Plate	1	
1415	052509	OL Roller	2	
1416	034270	Ball Bearing (F674ZZ)	2	
1417	035276	Spring	2	
1418	081620	O-Ring	4	
1419	003596	M2.6x5 Washer	10	
1420	006021	M2.6x4 Flat Screw	4	
1421	052564	Φ2.6x6 Phillips, Self Tightening, Flat Screw	2	
1422	003707	Φ3 E-Ring	6	
1423	003708	Φ4 E-Ring	5	
1424	206374	Φ4 Plain Washer (Wave Shape)	1	
1425	206375	Φ4x17 Reel Bushing	1	
1426	149426	M2.6 Nylon Nut	1	

iVIZION Optional Components Exploded Views

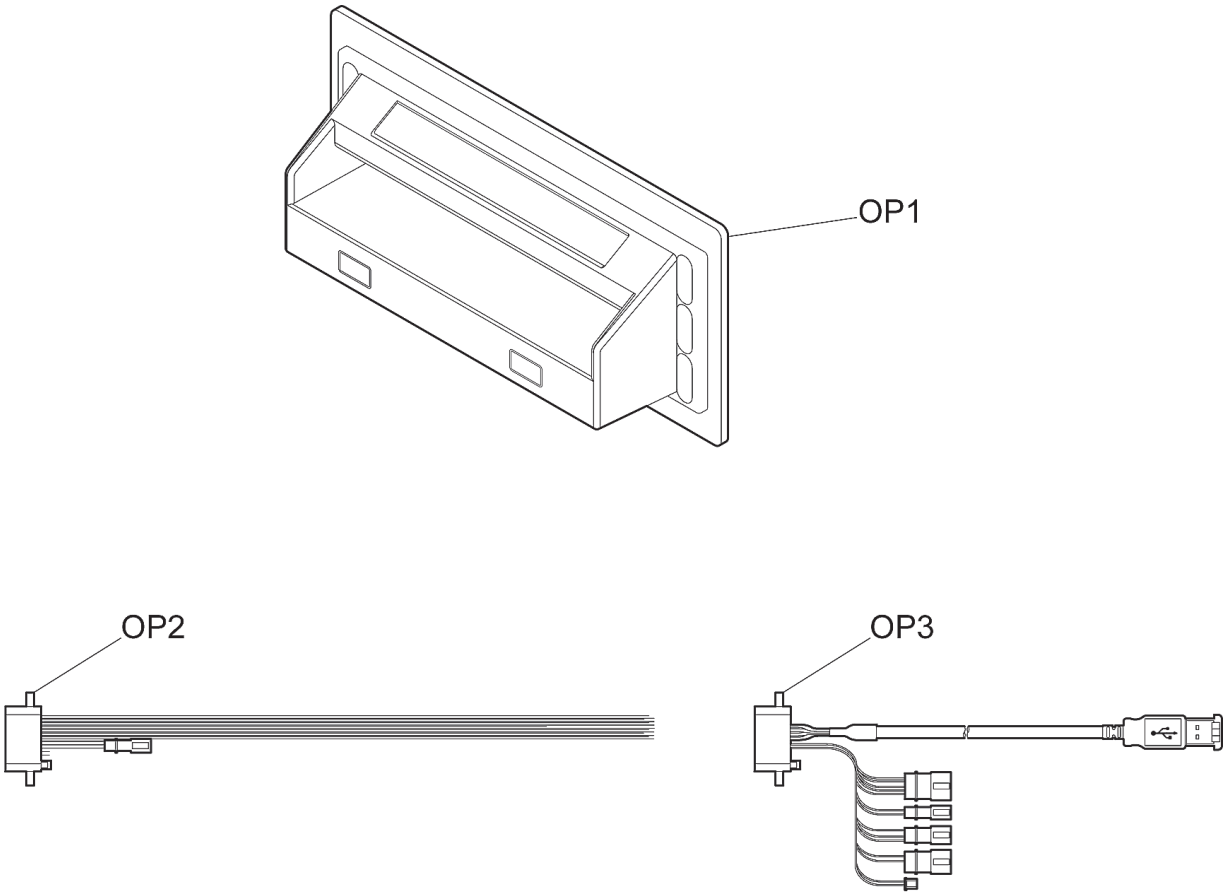

Figure 7-16 iVIZION Optional Components Exploded Views

iVIZION Optional Components Parts List

Table 7-16 iVIZION Optional Components Parts List

Ref No.	EDP No.	Description	Qty	Remark
OP1	196590	iVIZION Bezel SS Type 1 RoHS	1	Black/Green LED
	196591	iVIZION Bezel SS Type 2 RoHS	1	Blue/Blue LED (2 Line)
	196592	iVIZION Bezel SS Type 3 RoHS	1	Green/Green LED (2 Line)
OP2	185884	Interface Harness	1	One Side Clipping, Non-USB/IF, JCM Basic Harness
OP3	193582	Interface Harness	1	Connectors and USB/IF

iVIZION® Series
Next-Generation Banknote Acceptor Unit
Section 8

8 INDEX

THIS PAGE INTENTIONALLY LEFT BLANK

iVIZION® Series
Next-Generation Banknote Acceptor Unit
Appendix A

A TROUBLESHOOTING

This section provides Troubleshooting instructions for the iVIZION® Series Next-Generation Banknote Acceptor Unit. This section contains the following information:

- Introduction
- Troubleshooting Overview
- Malfunction LED Error Codes
- LED Indication Conditions.

Introduction

Most Banknote Acceptor failures are due to minor causes. Before replacing any parts, make sure that all assembly and circuit board connectors are properly fitted and the harness is properly connected.

Faulty Banknote acceptance by the Validator portion of the iVIZION® is often caused when dust or debris adheres to the Identification Sensor, or Transport Belt.
Clean the Acceptor section first, then observe the operating state of the Acceptor in detail when re-initializing power. This observation is important in locating any failure causes and the possible fault area.
If the Acceptor Head has to be repaired by disassembling it, always re-calibrate the Sensors following repair.

Perform all repairs by referring to Calibration and Testing in Section 6 of this manual, and Disassembly/Reassembly in Section 4 of this manual.

Troubleshooting Overview

The iVIZION® allows the operator to perform fault diagnosis by checking various fault Table listings against the symptom, and survey the cause(s) of any failure occurrences during the process.

After determining the cause of the failure, execute the Performance Test, perform a Sensor re-adjustment and then repair the iVIZION® Unit by replacing any appropriate parts deemed necessary.

Malfunction LED Error Codes

The iVIZION® contains two (2) Front Panel Indicators (e.g., a Green Power LED and a Status LED that exhibits four (4) colors).
The Power LED always lights a Green Color when supplying power to the iVIZION® Unit.
The Status LED lights solid or flashes one combination of four (4) Colors when errors, Banknote jams or a reject occurs. The iVIZION® Status, Error Codes, Banknote Jam Codes or Banknote Reject Codes are indicated by the number and/or Color of the Status LED solid or flashing light Color conditions.

LED Indication Conditions

Table A-1 lists the Green Power ON LED and the various Four (4) Color LED Status/Error Code indications for the iVIZION® Unit.

Table A-1 LED Code Condition

Symptoms	Power ON LED	Status LED	Causes and Solutions
Normal Condition	Lit Green	Extinguished (Out)	The iVIZION® is set-up correctly (Stand-by).
Initializing		Blue Flashes	The iVIZION® is initializing.
Downloading		Red Lit	The iVIZION® is performing a download.
		Green Lit	
Near Full Detection		Yellow Lit	The iVIZION® has detected a Nearly-full Cash Box Condition.
Test Mode		Blue Lit	The iVIZION® status is in a "Performance Test Mode" (Stand-by).
Error		Red Flashes	The iVIZION® has an error condition (See Table A-2 LED Error Codes).
Banknote Jam		Yellow Flashes	The iVIZION® has a jammed Banknote (See Table A-3 Jam LED Flash Error Codes).
Reject		Green Flashes	The iVIZION® has an error condition (See Table A-4 LED Reject Codes).

Table A-1 LED Code Condition (Continued)

Symptoms	Power ON LED	Status LED	Causes and Solutions
The iVIZION® is not working	Green Extinguished (Out)	Extinguished (Out)	**The power is not being supplied.** **[Solution]** • Ensure the harnesses are connected to the Interfaces. • Ensure that the supply working voltage and range is appropriate. • Ensure the Interface harnesses are not disconnected between the Transport Unit and the Frame Unit. • Ensure that the higher Interface Board Fuse (F1) is not blown. • Ensure that all harnesses and/or connectors are on the Control CPU Board.

Error, Jam and Reject Code Tables

The Status LED indicates various color combinations or solid/flash lighting conditions when errors listed in Table A-1, Table A-2 and Table A-3 occur. Identify the causes and solution for these indications from each Table's list and ensure that the relative assembles are properly connected and/or harnessed, and that all of the Unit's Sensors are clean.

Table A-2 lists the various LED Flash Error Code causes & solutions.

Table A-2 LED Error Codes

LED Color	Status LED		Causes and Solutions
	Flash Sequence	Errors	
Red	1	Stacker Full	Detected a Stacker Full Condition. [Solution] Retrieving the Banknotes from the Cash Box. [Relative Parts] Full Sensor: Validation CPU Board PL1, PT2, CN2 or Control CPU Board CN4.
	2	Communication Error between CPU Boards	Abnormal communication error between the Control CPU Board and the Validation CPU Board detected. [Solution] Ensure that all of the connectors on the Control CPU Board and the Validation CPU Board are properly connected.
	3	Sensor Adjustment Error	Abnormal Sensor adjustment detected on the Control CPU Board and the Validation CPU Board. [Solution] Perform a Sensor Adjustment of the Acceptor Unit.
	4	Speed Error	Abnormal Transport Speed Adjustment detected. [Solution] Ensure that no foreign objects are adhering to the Sensors. [Relative Parts] FEED Motor: Interrupter Board CN1 or Control CPU Board CN1.
	5	E2P Error (no Sensor adjustment)	Replaced the Acceptor Unit without performing a Sensor Adjustment. [Solution] Perform a Acceptor Unit Sensor Adjustment.
	6	Transport Error	Motor locked while transporting or stacking a Banknote. [Solution] Ensure that a foreign object and/or Banknote is not adhering to the Transport. [Relative Parts] FEED Motor: Interrupter Board CN1 or Control CPU Board CN1.
	7	Reject Error	Motor Locked while rejecting a Banknote. [Solution] Ensure that a foreign object and/or Banknote is not adhering to the Transport. [Relative Parts] FEED Motor: Interrupter Board CN1 or Control CPU Board CN1.
	8	Stacker Error (Pusher Plate Movement)	Motor locked while stacking (Pusher Plate movement) Banknote. [Solution] Ensure that a foreign object and/or Banknote is not adhering to the Transport. [Relative Parts] STACK Motor: Interrupter Board CN1 or Control CPU Board CN1.
	9	Pusher Plate Position Error	Did not detect the Position Sensor while moving the Pusher Plate. [Solution] Ensure that the Transport Unit and/or the Cash Box are properly Seated. Ensure that a foreign object and/or Banknote is not adhering to the Transport. [Relative Parts] Home Position Sensor: HP Sensor Board LED, PT1, C1/High I/F Board CN5, CN1, CN3 or Control CPU Board CN3 STACK Motor: Interrupter Board CN1 or Control CPU Board CN1.
	10	No Cash Box	The Cash Box is not seated. [Solution] Ensure that the Cash Box is properly seated. [Relative Parts] Box Sensor: Validation CPU Board PL4, PT3, PT4, CN2 or Control CPU Board CN4.
	11	No Acceptor Head	The Acceptor Unit's Access Cover is not locked in place. [Solution] Ensure that the Acceptor Unit's Access Cover is properly locked down.
	12	Anti-Strings Error	Fraud detected. [Solution] Ensure that no fraud condition exists such as anti-stringing.
	13	Reserved	Reserved

Table A-2 LED Error Codes (Continued)

LED Color	Status LED		Causes and Solutions
	Flash Sequence	Errors	
Red	14	Damaged Board	An IC is malfunctioning. [Solution] The Control CPU Board or the Validation CPU Board may be damaged. Replace the Circuit Boards if necessary.
	15	ROM/RAM Error	ROM or RAM is malfunctioning. [Solution] The Control CPU Board or the Validation CPU Board has performed abnormally. Replace the Circuit Boards if necessary.
Blue	1	Reserved	Reserved
	2	ICB Function (Seating) Error	The ICB Seating capacity is malfunctioning. [Solution] The ICB Seating Function or the RF-ID Module may be damaged. Perform seating again or replace the relative parts. [Relative Parts] RFID Module: Validation CPU Board CN3, CN2 or Control CPU Board CN4.
	3	ICB R/W Error	ICB unable to communicate. [Solution] The ICB Seating Function or the RF-ID Module may be damaged. Perform seating again or replace the relative parts. [Relative Parts] RFID Module: Validation CPU Board CN3, CN2 or Control CPU Board CN4.
	4	ICB Data Error	ICB Data is malfunctioning. [Solution] The ICB Seating Function or the RF-ID Module may be damaged. Perform seating again or replace the relative parts. [Relative Parts] RFID Module: Validation CPU Board CN3, CN2 or Control CPU Board CN4.
	5	ICB Number Error	The Game Machine number is different. [Solution] The ICB Seating Function or the RF-ID Module may be damaged. Perform seating again or replace the relative parts. [Relative Parts] RFID Module: Validation CPU Board CN3, CN2 or Control CPU Board CN4.
	6	ICB Initialize Error	The ICB Seating Function or the RF-ID Module may be damaged. Re-seat the Cash Box again or replace the relative parts. [Relative Parts] RFID Module: Validation CPU Board CN3, CN2 or Control CPU Board CN4.
	7	Reserved	Reserved
	8	Reserved	Reserved
	9	Reserved	Reserved
	10	Reserved	Reserved
	11	Reserved	Reserved
	12	Reserved	Reserved
	13	Reserved	Reserved
	14	Reserved	Reserved
	15	Reserved	Reserved

Jam Error Codes

Table A-3 lists the various LED Jam Flash Code causes & solutions.

Table A-3 Jam LED Flash Error Codes

LED Color	Status LED		Causes and Solutions
	Flash Sequence	Errors	
Yellow	1	Reserved	Reserved
	2	Entrance Sensor Jam	A Banknote jam occurred near the Entrance Sensor [Solution] Ensure that a foreign object and/or Banknote is not adhering to the Transport. [Relative Parts] Entrance Sensor: Sensor Board LED1, PT1, CN1, or Validation CPU Board CN7.
	3	CIS Sensor Jam	Banknote jam occurs near the CIS Sensor. [Solution] Ensure that a foreign object and/or Banknote is not adhering to the Transport. [Relative Parts] CIS Sensor (Upper): Sensor Transfer Board CN4, CN1, CN2, Sensor Board CN2, CN3, CN1 or Validation CPU Board CN7. Lower CIS Sensor: Sensor Board CN5, CN1 or Validation CPU Board CN7.
	4	Exit Sensor Jam	Banknote jam occurs near the Exit Sensor. [Solution] Ensure that a foreign object and/or Banknote is not adhering to the Transport. [Relative Parts] Exit Sensor: Sensor Board LED2, PT1, CN1 or Validation CPU Board CN7.
	5	Feed-in Sensor Jam	Banknote jam occurs near the Feed-in Sensor. [Solution] Ensure that a foreign object and/or Banknote is not adhering to the Transport. [Relative Parts] Feed-in Sensor: High I/F Board LED1, PT1, CN3/ or Control CPU Board CN3.
	6	Feed-out Sensor Jam	Banknote jam occurred near the Feed-out Sensor. [Solution] Ensure that a foreign object and/or Banknote is not adhering to the Transport. [Relative Parts] Feed-out Sensor: Validation CPU Board PL3, PT1, CN2 or Control CPU Board CN4.
	7	Cash Box Inside Jam	Banknote jam occurs at the Cash Box. [Solution] Ensure that a foreign object and/or Banknote is not adhering to the Transport.
	8	Reserved	Reserved
	9	Reserved	Reserved
	10	Reserved	Reserved
	11	Reserved	Reserved
	12	Reserved	Reserved
	13	Reserved	Reserved
	14	Reserved	Reserved
	15	Reserved	Reserved

Reject Error Code

Table A-4 is the LED Reject Error Flash Codes causes & solutions.

Table A-4 LED Reject Codes

LED Color	Status LED		Causes and Solutions
	Flash Sequence	Errors	
Lit Green	1	Banknote Insertion Error	Banknote is rejected by a skew detection. [Solution] Ensure that a foreign object and/or Banknote is not adhering to the Acceptor Unit Sensors. Perform adjustment of the Acceptor Unit Sensors if necessary.
	2	UV Sensor Error	Banknote is rejected by the UV Sensor process. [Solution] Ensure that a foreign object and/or Banknote is not adhering to the Acceptor Unit Sensors. Perform adjustment of the Acceptor Unit Sensors if necessary.
	3	Banknote remaining Error (Head Section)	Banknote is rejected by detecting a Banknote remaining in the Acceptor Unit. [Solution] Ensure that a foreign object and/or Banknote is not adhering to the Acceptor Unit Sensors. Perform adjustment of the Acceptor Unit Sensors if necessary.
	4	Adjustment Error/ Diameter Error	Banknote is rejected by the Validation Sensing process. [Solution] Ensure that a foreign object and/or Banknote is not adhering to the Acceptor Unit Sensors. Perform adjustment of the Acceptor Unit Sensors if necessary.
	5	Transport Time-Out Error	Transport timing is incorrect. [Solution] Ensure that a foreign object and/or Banknote is not adhering to the path near the Transport Path Sensors.
	6	Denomination Error	Banknote is rejected by an incorrect denomination validation process. [Solution] Ensure that a foreign object and/or Banknote is not adhering to the Acceptor Unit Sensors. Perform adjustment of the Acceptor Unit Sensors if necessary.
	7	Photo Pattern Error 1	Banknote is rejected by the Validation Pattern process. [Solution] Ensure that a foreign object and/or Banknote is not adhering to the Acceptor Unit Sensors. Perform adjustment of the Acceptor Unit Sensors if necessary.
	8	Photo Level Error	Banknote is rejected by the Transmissive Level Validation process. [Solution] Ensure that a foreign object and/or Banknote is not adhering to the Acceptor Unit Sensors. Perform adjustment of the Acceptor Unit Sensors if necessary.
	9	INHIBIT Error	Banknote is rejected by the INHIBIT Setting (banknote acceptance inhibit). Command for Escrow has not been sent. [Solution] Ensure that the active state of a Host Machine or an iVIZION® DIP Switch INHIBIT setting is properly set.
	10	Reject Request	Banknote is rejected by Host Machine request. [Solution] Ensure the INHIBIT setting of the Host Machine is correct.
	11	Ticket Error	Ticket Upside-down. [Solution] Ensure that the Ticket Barcode is facing up when inserted.
	12	Transport Overrun Error (Stacker Part)	Banknote is rejected by detecting a Banknote remaining in the Transport Unit. [Solution] Ensure that a foreign object and/or Banknote is not adhering to the Transport Unit Sensors.
	13	Banknote Length Error	Banknote is rejected because of a length longer than the acceptable length. [Solution] Ensure that the Banknote is a proper length
	14	Photo Pattern Error 2	Banknote is rejected by the Validation Pattern process. [Solution] Ensure that a foreign object and/or Banknote is not adhering to the Acceptor Unit Sensors. Perform an adjustment of the Acceptor Unit Sensors if necessary.
	15	Authentic Banknote Identify Error	Banknote is rejected by the authentic Banknote Validation process. [Solution] Ensure a foreign object and/or Banknote is not adhering to the Acceptor Unit Sensors. Perform adjustment of the Acceptor Unit Sensors if necessary.

Maintenance Equipment

This portion provides product information for the iVIZION® Maintenance Equipment.

iVIZION Maintenance Equipment

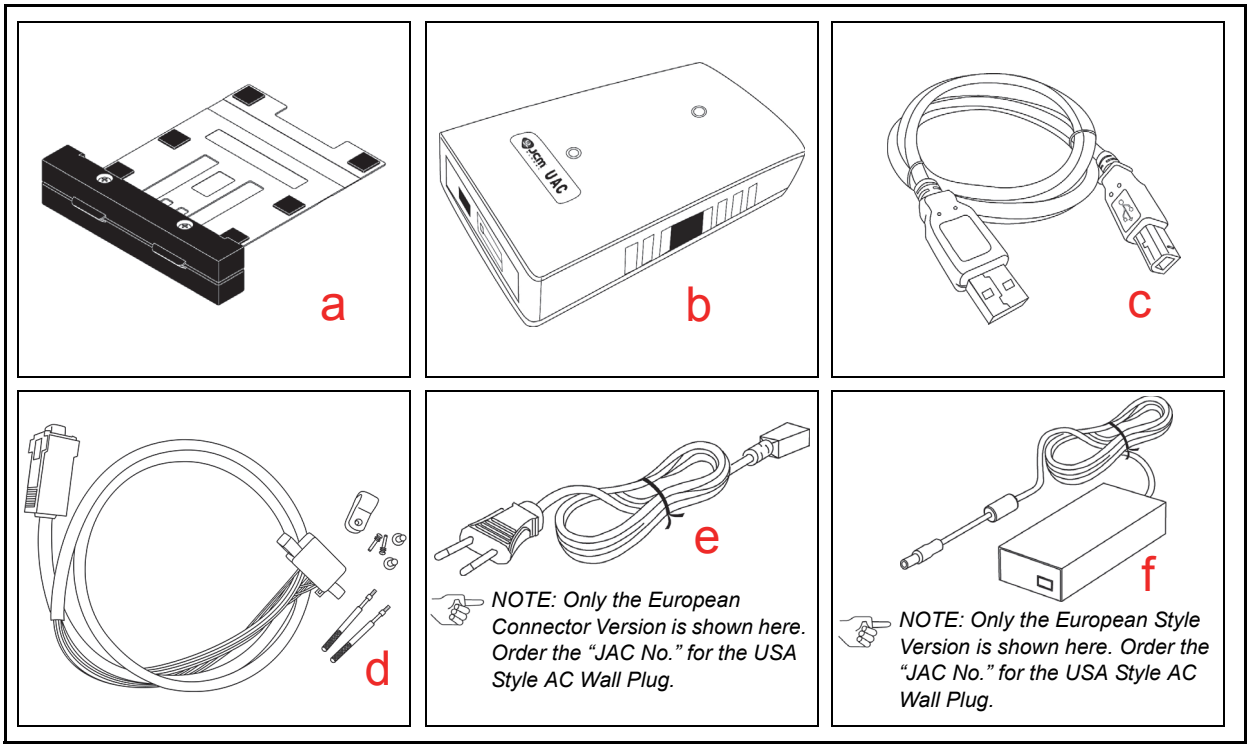

Figure A-1 Additional Maintenance Equipment Requirements

Table A-5 Additional Maintenance Equipment Parts List

Ltr.	EDP No.*	JAC No.	Description	Qty.	Remark
a	201544	N/A	Reference Paper (White: KS-072 Std)†	1	
b	G00205	501-100218R	UAC	1	
c	G00230	400-100294R	UAC USB Cable	1	
d	G00262	N/A	UAC/MIB Adaptor Harness (ID-003)	1	
e	G00213	302-100007RA	Power Cord	1	For UAC
f	G00286	451-422264R	AC Adaptor	1	For UAC

*. A Product EDP Number that begins with a "G" is a Product developed by JCM-E Germany.

†. Carefully replace the used Reference Paper back into its protective Shipping Carton following each calibration use (refer to Reference Paper Use Precautions and Figure 1-3 in Section 1 for further detailed user instructions.

Reference Paper Handling

All JCM Reference Paper should be handled as follows:

1. Do not allow the Reference Papers to endure high temperatures and/or high humidity environments.
2. Store unused Reference Papers in their original Shipping Carton to avoid exposing them to direct Sunlight and/or bright indoor light. Ensure that the Reference Papers being stored are not damaged as they are replaced into their shipping carton.
3. Do not use Reference Paper containing damaged areas that are worn, dirty, wrinkled, distorted and/or discolored.
4. Use new Reference Paper for every 400 Units being calibrated. Incorrect calibration errors may occur when using Reference Paper that has been used for calibrating more than 400 Units.

iVIZION® Series

Next-Generation Banknote Acceptor Unit

Appendix B

B GLOSSARY

A

1 **Acceptor** – a term used in Communication Section 3 referencing functions sent to, and received from the Banknote Acceptor by software commands… See Page 1-1

B

2 **Bezel** – a removable Plastic Assembly attached to the front of the Banknote Insertion Slot of a iVIZION® Unit… See Page 1-2

C

3 **Calibration** – a process performed on electronic equipment which ensures that all circuits are properly aligned and operating at optimum levels. For iVIZION®, calibration is accomplished using a software based program which checks and sets the operational reference levels for Sensors. This helps to ensure that the Unit operates with the highest Banknote acceptance rate possible. Calibration is recommended whenever the CPU Board, or one of the Sensor Boards are replaced… See Page 6-6

4 **ccTalk** – a Serial based Communication Protocol commonly used in control, electronic payment, and vending systems. Developed by Money Controls Ltd., the format enjoys widespread use throughout Europe. cc-Talk is supported communications format in the iVIZION® Unit… See Page 2-6

5 **Checksum** – a numerical value assigned to a data file or block of data (usually expressed in Hexadecimal notation). Checksum values are used to verify that the contents of a data file are not corrupted in any way during transmission or encryption. The Checksum values of both the original and duplicate files are compared to each other. If the values match, then the duplicate file is recommended that file be copied or encrypted again until the Checksum do agree technique, which is highly accurate and can detect data errors down to a single computer … See Page 6-5

6 **CIS** – an acronym for Contact Image Sensor. This type of image Sensor is able to scan every portion of a Banknotes surface as it passes over it… See Page 4-6,4-8 & 4-9

7 **CPU** – an acronym for Central Processing Unit… See Page 4-1

D

8 **DIP Switch Block –** Dual Inline Packaged Switch Block – a printed circuit board mountable two-position slide switch package containing up to 16 individual switches… See Page 2-2

E

9 **External DIP Switch** – a procedure for performing iVIZION® Calibration using the External DIP Switches… See Page 6-15

F

10 **FFC** – an acronym for Flat Flexible Cable. This type of Cable contains printed circuit traces in it, and is generally used to interconnect and distribute signal information between various Printed Circuit Boards… See Page 4-3, 4-7 & 4-8

11 **FG PLT** – an acronym for **F**rame **G**rounding **PL**a**T**e… See Page 2-1

12 **FPC** – an acronym for Flexible Printed Circuit. This type of Circuit Card/Cable contains printed circuit traces on each side of it, and is generally used to interconnect and distribute signal information between two closely placed Printed Circuit Boards … See Page 4-4

I

13 **ID Sticker** – another name for the Product Identification Label located on the right side of the iVIZION® Cabinet Frame… See Page 6-7

J

14 **JCM USB Tool Suite Standard Edition** – a PC Application Program that includes Sub-routine Programs for Downloading a File, Calibrating Sensors, examining Performance Metrics, testing Acceptor Functions, Enabling & Disabling the ICB Feature and viewing an image of the last Banknote accepted… See Page 6-1

15 **JPL** – an acronym for JCM Private Line to identify the Connector for activating an attached Sentry-2 Bezel Option… See Page 1-4

L

16 **LD** – an acronym for "**L**ess **D**own" or No Stacker present… See Page 1-2

17 **LED** – an acronym for **L**ight **E**mitting **D**iode. An LED is Semiconductor Device which turned on, emits a signal output in the visible light range. Available in a variety of colors, LEDs are cost effective and are commonly used as Indicator Lights in a variety of equipment devices. LEDs are also available in the invisible light range (i.e., ultraviolet, near-infrared etc.) making then useful as operational indicators for a variety of electronic equipment and applications, such as Banknote Validation Circuit in the iVIZION® Unit… See Page 1-5

P

18 **Photo-Coupler** – a method of increasing safety to both the equipment and personnel by isolating and routing transmitted data signals via using a Light Emitting Diode (LED) and Photosensitive Transistor combination circuit in various electronic equipment… See Page 2-4

19 **Pictograph** – small internationally recognized safety and attention symbols placed to the left Notes, Cautions and Warnings throughout a JCM Maintenance Manual … See Page 1-1

R

20 **Reference Paper** – specially coated/colored paper strips which are inserted into a Banknote Validator when performing iVIZION® Unit Calibration. Reference Paper is used to help set minimum and maximum threshold detection levels when adjusting the photo-optical Sensors in the unit for optimum

performance… See Page 6-7

21 **RFID** – an acronym for Radio Frequency IDentification… See Page 1-2 & 4-4

22 **RS232C** –a common serial data communication standard protocol… See Page 2-5

S

23 **Sensor –** a Photo Sensitive Device and LED combination designed to detect timing and movement events… See Page 1-2

T

24 **Timing Belt** – Rubberized Belts used to transport Banknote inside the Acceptor … See Page 4-1

V

25 **Validation** – in Banknote Validators, identifies the process of drawing a Banknote into the Unit and then uses various Sensors to read and determine the authenticity of the Banknote based on the comparison of collected reading to a set of reference data stored in memory … See Page 1-3

a RoHS Compliant Product

JCM® GLOBAL

Contains RoHS Compliant Components

Issue #4074-SME-01-03